POLYTESTS
TESTING THROUGH YOUR REALITY

TEST REPORT

TEST OF A HYBRID CATALYTIC WOOD BURNING STOVE FOR EMISSIONS AND EFFICIENCY

PER EPA METHODS 28R AND ASTM E2515, MAY 2015

Client: Woodstock Soapstone
Model name: Absolute Steel Hybrid 211

Attention: Rafaël Sanchez

TESTED BY:

Services Polytests
695-B Gaudette
St-jean-sur-Richelieu, QC, J3B 7S7

TEST DATES:
REPORT DATE: 2016 January 30th
Revision1: April 29th 2021
Project number: PI-20122
Revision 2: June 14th 2021

All services undenaken are subject to the following general policy: Reports are submitted for exclusive use of the clients to whom they are addressed. Their significance is subject to the adequacy and representative character of the samples and to the comprehensiveness of the tests, examinations or surveys made. This document may not be reproduced except in its entirety without the written permission from Services Polytests.

Tested: written by:

Maxime Martin Danick Power, P. Eng

Verified by PFS Representative (third party certifier):

SUMMARY

1 Introduction 5
1.1 General 5
1.2 Test unit information 5
1.3 Results 5
1.4 Pretest information 6
2 Summary of test results 6
2.1 Emissions 6
2.2 Weighted average calculation 7
2.3 Test facility conditions 7
2.4 Fuel qualities 8
2.5 Dilution tunnel flow rate measurements and sampling data (ASTM E2515) 8
2.6 Dilution tunnel dual train precision 9
2.7 General summary of results 9
3 Process description 10
3.1 Discussion 10
3.2 Unit dimensions 10
3.3 Air supply system 12
3.4 operation during test 13
3.5 Star-up operation 14
3.6 Sampling locations 14
3.7 Drawings 14
3.8 Emissions efficiency testing equipment list 14
4 Sampling methods 14
4.1 Particulate sampling 14
5 Quality assurance 15
5.1 Instrument calibration 15
5.1.1 Gas meters 15
5.1.2 SCALES 15
5.1.3 Gas analyzers 15
5.2 Test method procedures 15
5.2.1 Leak check procedures 15
5.2.2 Tunnel velocity flow measurement 15

5.2.3 Pm sampling proportionality (ASTM E2515) 15

Revision 1: update comments p.14, 3.4 operation during testing for anomalies, and validity of runs. Update NCBI report to include firebox Volume. Section 1.4 p6 preburn done at medium heat draw. No preliminary runs have been done on this stove typo removed from the original report. Stove received on January 4th and test start on January 5th, not enough time for a preliminary run. Update table2.1 for Co average gr/hr and gr/min.

List of appendixes

APPENDIX 1: Raw data, forms and results

APPENDIX 2: Proportionality results

APPENDIX 3: Calibration data

APPENDIX 4: Unit pre burn

APPENDIX 5: Participants

APPENDIX 6: Drawings and specifications

APPENDIX 7: Operator's manual

APPENDIX 8: Photographs of test set up

APPENDIX 9: Test load photographs

APPENDIX 10: Laboratory Operating Procedures

APPENDIX 11: Sample calculations

APPENDIX 12: Volume calculations

APPENDIX 13: Operating instruction

APPENDIX 14: Drawing Air flow pattern

1 INTRODUCTION

1.1 GENERAL

Laboratory

- Location: Services Inc., 695-B Gaudette St-jean-sur-Richelieu QC, Canada J3B 7S7
- Elevation: 100 feet above sea level

Test program

- Purpose: unit qualification NSPS 2020
- Test dates: January 5th to 14th 2016
- Test methods used:
    - Particulate emissions: methods 28R; ASTM E2515-11 as referred into 40 CFR Part 60 Subpart AAA
    - Efficiency: CSA B415.1-10

1.2 TEST UNIT INFORMATION

General

- Manufacturer: Woodstock Soapstone
- Product type: Hybrid freestanding wood stove
- Combustion system: Hybrid (post-combustion with catalyst)
- Unit tested: Absolute Steel Hybrid 211

Particularities

- Options:
- optional ash pan
- Top or rear flue
- Optional height of legs

1.3 RESULTS

Emission results obtained

- Weighted average emission rate: 0.50 grams/hour
- Maximum rate cap: 1.52 grams/hour at run 1

Conformity: NSPS Phase 2020

1.4 PRETEST INFORMATION

Unit condition: The unit was received by the manufacturer January 4th 2016. The Data for the 50hrs of aging is provide by the manufacturer and was done at their facility prior to testing series, at medium heat draw.

Set up

- Venting system type: 6-inch steel pipe and insulated chimney
- System height from floor: 15 feet
- Particularities: The unit was tested with the back flue configuration

2 SUMMARY OF TEST RESULTS

2.1 EMISSIONS

Run Number	Test Date D/M/Y	Burn Rate (kg/hr)	Emission Rate (g/hr)	Heating Efficiency (% Overall)	1st hour Emission Rate (g/hr)	CSA B415.1 CO emission Gr/hr
1	05-01-2016	3,411	1,52	70,7%	2.24	5.14
2*	07-01-2016	1,847	2,76	75,6%	8.68	6.66
3	11-01-2016	1,042	0,20	79,5%	0.43	0.85
4	12-01-2016	0,956	0,14	80,3%	0.20	0.75
5	13-01-2016	1,451	0,42	76,2%	1.04	2.90
6	14-01-2016	1,415	0,50	74,8%	1.75	3.01
					Weighted average Co gr/hr	2.32
					Weighted average Co gr/min	0.04

*Test #2 will be replaced in the weighting average by the average calculation of test #5 & #6

2.2 WEIGHTED AVERAGE CALCULATION

Test No.	Burn Rate	(E) Ave. Emission Rate g/hr	(OHE)	Heat Output (BTU/HR)	Prob.	(K) Weighting Factor	(KxE)
4	0,956	0,140	80,30	14426	0,3342	0,4027	0,0564
3	1,042	0,200	79,50	15213	0,4027	0,3689	0,0738
6	1,415	0,500	74,80	19895	0,7031	0,3199	0,1599
5	1,451	0,420	76,20	20797	0,7226	0,2859	0,1201
1	3,411	1,520	70,70	45317	0,9890	0,2774	0,4217
					sum	1,65476	0,8319

Weighted Average Emissions Rate: 0.50 g/hr
Weighted Average Overall Efficiency: 76.74%

2.3 TEST FACILITY CONDITIONS

Run Number	Room Temperature		Barometric pressure		Relative humidity		Air Velocity	
	Before (F)	After (F)	Before (in.Hg)	After (in.Hg)	Before (%)	After (%)	Before (ft/min)	After (ft/min)
1	69	76	30,298	30,357	16,9	15	22	20
2	71	69	30,357	30,357	20,8	20,8	26	22
3	71	73	29,678	29,914	20,9	17,1	22	21
4	70	75	29,973	29,943	18,3	21	23	22
5	71	76	29,707	29,855	18,1	15	22	20
6	73	78	29,825	29,825	17,6	18,7	21	22

2.4 FUEL QUALITIES

Run Number	Pre-test Load			Test Load					
	Loading Weight Wet Basis (lbs)	Moisture Content Dry Basis (%)	Coal bed Weight (lbs)	Weight Wet Basis (lbs)	Density Wet Basis (lbs/cuft)	Moisture Content Dry Basis (%)	Piece Length (in.)	Number of 2X4's	Number of 4x4's
1	12,66	23,21	3,5	15,86	6,342	20,49	16,25	4	2
2	11,56	23,29	3,7	16,17	6,466	20,29	16	4	2
3	14,65	20,46	4,0	16,32	6,528	20,39	16	4	2
4	14,68	21,28	4,2	16,93	6,772	20,85	16	4	2
5	13,80	20,10	4,2	17,31	6,926	20,72	16	4	2
6	14,76	20,40	4,2	17,49	6,996	20,55	16	4	2

2.5 DILUTION TUNNEL FLOW RATE MEASUREMENTS AND SAMPLING DATA (ASTM E2515)

Average dilution tunnel measurements				Sam pie Data			
Run Number	Burn Rate (Min)	Volumetric Flow Rate (dscf/min)	Total Temperatures (°R)	Volume sampled (DSCF)		Particulate catch (mg)	
				1	2	1	2
1	105	183,99	583,65	18,135	17,685	2,50	2,50
2	198	174,62	557,25	34,634	33,522	9,80	8,30
3	354	184,55	545,83	61,314	59,263	1,10	1,10
4	399	177,58	543,62	70,551	67,792	1,00	0,90
5	269	180,30	554,04	46,842	45,048	1,80	1,80
6	279	177,34	557,97	48,173	46,340	2,20	2,30

2.6 DILUTION TUNNEL DUAL TRAIN PRECISION

Run Number	Sample Ratio		Total Emission (g)		
	Train 1	Train 2	Train 1	Train 2	% Deviation
1	1065,27	1092,36	2,62	2,69	1,33%
2	998,27	1031,41	9,73	8,51	6,68%
3	1065,53	1102,41	1,17	1,21	1,70%
4	1004,28	1045,15	0,98	0,92	3,13%
5	1035,38	1076,61	1,86	1,94	1,95%
6	1027,10	1067,71	2,21	2,41	4,33%

2.7 GENERAL SUMMARY OF RESULTS

Run Number	Burn Rate (kg/hr)	Average Surface Temperature (F)	Change in surface Temperature (F)	Initial Draft (in. H^2O)	static pressure tunnel (in. H^2O)	Primary Air Setting	Run Time (min)
1	3,411	368,16	125,3	0,058	0,330	Full open	105
2	1,847	311,38	125,4	0,049	0,280	Mid-point	198
3	1,042	324,82	-15,7	0,067	0,290	Fully close	354
4	0,956	296,22	8,0	0,047	0,270	Fully close	399
5	1,451	332,99	51,1	0,059	0,270	Mid-point	269
6	1,415	340,26	64,4	0,064	0,270	Mid-point	279

3 PROCESS DESCRIPTION

3.1 DISCUSSION

The unit was received by the manufacturer January 4th 2016 in good shape.

3.2 UNIT DIMENSIONS

Baffle

- Location: between top of combustion chamber and hearth
- Restriction: 5 in x 20 in. at the front of unit
- Dimensions: covers the hearth area minus the restriction at front
- Material: Stainless 13 ga.

Bricks

- Inside Firebox refractory brick 1inch. tick cover one side, bottom and the back of the combustion chamber, the door is fill with an soapstone brick ¾ inch tick

Flue gas exhaust

- Location: top flue located at the top, or back flue located at the back
- Dimensions: 6 in. diameter
- Material: Steel

Gasket

- Location:
- Loading door (50” X 0.750 Fiberglass rope)
- Under the steel lid / cooktop (62” x 1.0” Fiberglass rope)
- Under the catalytic bypass (40” X 0.625 fiberglass rope)
- Under the catalytic combustor (40” X 0.625 fiberglass rope)
- Ash pan door (33” x 0.5” Fiberglass rope)
- Flue collar gasket (36” X 0.375 adhesive-backed tape gasket)
- Cover plate gasket (36” x 0.375 adhesive-backed tape gasket)
- Outside air adaptor (106” x 0.375 Adhesive backed tape Gasket)
- window (59” x ¾ Adhesive-Backed window gasket),

Overall unit dimension

- Firebox dimensions: 19.00 in wide x 15.25 in. deep x 13.25 to 15.67 in. high
- Usable volume: 2.43 cuft
- Overall unit dimensions: 30 7/8 in wide x 29 1/16 in. deep x 33 ¼ in. high

Convection fan

- none

Catalyst

- Stainless Steel Honeycomb
- Operating temperature at least 500 degrees F
- Manufacturer: Clariant Corporation
- Model: Stainless, durafoil
- Dimensions: 5.25-inch x 10-inch x 2 inch (49 CPSI longlife)

By-pass

- Stainless Steel 13ga.
- Dimensions: 2.5-inch x 15.75 inch

3.3 AIR SUPPLY SYSTEM

Description

- Primary air: window wash design with air intake at the back of unit
- Secondary air: secondary baffle with holes with air intake at the back of unit, additional air can be provided when the stove gets hot two bi-metal plate open for additional secondary air.

Characterization

The following table shows the inlet and outlet sections of each system. The air introduction system number is referred on a set of drawings in Appendix 6.

AIR INTRODUCTION SYSTEM		INLET (1) sq. in.			OUTLET
Identification	Type	Imin	Imax	Controlled	(sq. in.)
A *	Primary	0.08	3.41	Yes	3.77
B *	Secondary	0.41	3.42	Yes	5.12
C *	Pilot Holes	0.10	0.10	None	0.06
D*	Catalyst air	0.00	3.12	Automatic	1.61

* This section would be filled by measuring and comparing with the manufacturer's drawings included in the test report.

<u>Legend</u>

Identification: Tag name referred on drawings in Appendix 14, section airflow pattern
Type: Characterization of air intake
Imin: Minimum air intake of a particular air channel
Imax: Maximum air intake of a particular air channel
Controlled: Determines if a provision for air control is present
Outlet: Total air outlet of a particular air channel

Note: surfaces are expressed in sq. Inches

3.4 OPERATION DURING TEST

All runs have been found appropriate, no anomalies happened and all runs below have been validate and found compliant. All tests done with back flue installation, legs and optional ash pan

Run #1
This run was performed on 2016 January 5th. It lasted 105 minutes and a category 4 burn rate was obtained at 3.4 kg/hr & emission at 1.52gr/hr.

Run #2
This run was performed on 2016 January 7th. It lasted 198 minutes and a category 3 burn rate was obtained at 1.85 kg/hr & emission at 2.76gr/hr. As results of poor emission, this test will be replaced in the average calculation by test #5 & #6

Run #3
This run was performed on 2016 January 11th. It lasted 354 minutes and a category 2 burn rate was obtained at 1.04 kg/hr & emission at 0.20 gr/hr.

Run #4
This run was performed on 2016 January 12th. It lasted 399 minutes and a category 2 burn rate was obtained at 0.96 kg/hr & emission at 0.14 gr/hr.

Run #5
This run was performed on 2016 January 13th. It lasted 269 minutes and a category 3 burn rate was obtained at 1.45 kg/hr & emission at 0.42gr/hr.

Run #6
This run was performed on 2016 January 14th. It lasted 279 minutes and a category 3 burn rate was obtained at 1.415 kg/hr & emission at 0.50 gr/hr.

- Details: Refer to the front page of each test run data sheets found in appendix for the detailed test sequence showing air supply settings and adjustments, fuel bed adjustments and operational specifics of the test unit.

Test fuel cribs

- Type of wood: Douglas fir, grade c or better, 19 to 25% dry basis moisture content
- Description: for each test, description of the fuel crib is found on the front page of each test run data sheet together with photograph in appendix.

3.5 STAR-UP OPERATION

The complete manufacturer's firing procedure of each burn rate category is fully described in appendix 13.

3.6 SAMPLING LOCATIONS

Particulate samples are collected from the dilution tunnel at a point 15 feet from the tunnel entrance. The tunnel has two elbows and two mixing baffles in the system ahead of the sampling section. The sampling section is a continuous 10-foot section of 6-inch diameter pipe straight over its entire length. Tunnel velocity pressure is determined by a standard pitot tube located 48 inches from the beginning of the sampling section. Thermocouple is installed on the pitot tube to measure the dry bulb temperature. MC is assumed, as allowed, to be 4%. Tunnel samplers are located 56 inches downstream of the pitot tube and 16 inches upstream from the end of this section.

3.7 DRAWINGS

Various drawings of the stack gas sampling train and of dilution tunnel system are found in Appendix 1.

3.8 EMISSIONS EFFICIENCY TESTING EQUIPMENT LIST

The complete test equipment list together with all corresponding calibration data can be found in Appendix 3.

4 SAMPLING METHODS

4.1 PARTICULATE SAMPLING

Particulates were sampled in strict accordance with ASTM E2515. This method uses two identical sampling systems with Gelman AIE 61631 binder free (or equivalent), 47 mm diameter filters. The dryers used in the sample systems are filled with "Drierite" before each test run.

5 QUALITY ASSURANCE

5.1 INSTRUMENT CALIBRATION

5.1.1 GAS METERS

At the conclusion of each test program the gas meters are verified using the reference dry gas meter. This process involves sampling the train operation for 1 cubic foot of volume. With readings made to .01 fr', the resolution is 1 %, giving an accuracy higher than the 2% required by the standard.

5.1.2 SCALES

Before each test program, the different scales used are checked with traceable calibration weights to ensure their accuracy.

5.1.3 GAS ANALYZERS

The continuous analyzers are zeroed and spanned before each test with NBS traceable gases. A mid-scale multi-component calibration gas is then analyzed (values are recorded). At the conclusion of a test, the instruments are checked again with zero, span and calibration gases (values are recorded only). The drift in each meter is then calculated and must not exceed 5% of the scale used for the test.

5.2 TEST METHOD PROCEDURES

5.2.1 LEAK CHECK PROCEDURES

Before and after each test, each sample train is tested for leaks. Leakage rates are measured and must not exceed 0.02 CFM or 4% of the sampling rate. Leak checks are performed checking the entire sampling train. Pre-test and post-test leak checks are conducted with a vacuum of 5 inches of mercury. Vacuum is monitored during each test and the highest vacuum reached is then used for the post test vacuum value. If leakage limits are not met, the test run is rejected. During these tests, the vacuum is typically less than 2 inches of mercury. Thus, leakage rates reported are expected to be much higher than actual leakage during the tests.

5.2.2 TUNNEL VELOCITY FLOW MEASUREMENT

The tunnel velocity is calculated from a center point pitot tube signal multiplied by an adjustment factor. This factor is determined by a traverse of the tunnel as prescribed in EPA Method 1. Final tunnel velocities and flow rates are calculated from EPA Method 2, Equation 6.9 and 6.10. (Tunnel cross sectional area is the average from both lines of traverse.)

Pitot tubes are cleaned before each test and leak checks are conducted after each test.

5.2.3 PM SAMPLING PROPORTIONALITY (ASTM E2515)

Proportionalities were calculated in accordance with ASTM E2515. The data and results are found in appendix.

APPENDIX 1: Raw data, forms and results

Paramètres

Tous les facteurs de corrections et autres paramètres qui peuvent être modifiés par l'utilisateur du fichier sont regroupés ici.

Code verrouillage:	MPMQ	

Description du test

Test standard	EPA	
Run #	1	
Date	05-01-2016	
Technicien	M.M.	
Project #	PI-20122	

Description de l'unité

Manufacturier	Woodstock Soapstone	
Modèle	211	
Combustion system	Cat	
Appliance type	Hybrid woodstove	
Firebox volume	2,5	cu ft.
Appliance weight empty	600	lbs
Appliance weight full	600	lbs

Paramètres du test

Logging time	1	min
Manufacturer's rated heat output	na	BTU/h Donnée fournie par le manfacturier
Targeted category	1	
Targeted output	à définir	BTU/h
Cp steel	0,1	BTU/lb-°F

Échantillonnage

Blank sampling rate	0,20	cuft/min
Internal probe diameter	0,18	in.
Calibration Factor (DGM #1):	0,996	Dimensionless
Equipment number (DGM #1):	EM-178	
Calibration Factor (DGM #2):	0,990	Dimensionless
Equipment number (DGM #2):	EM-179	
Calibration Factor (DGM #3):	1,000	
Equipment number (DGM #3):	EM-070	Dimensionless

Tunnel

Targeted tunnel flow rate	160	scfm
Tunnel diameter	6	in.
Molecular weight	29	
Pitot tube type	Standard	
Pitot tube coefficient	0,99	Dimensionless

Project nu.	PI-20122
Date	05-01-2016
Technicien	mm

Fuel data

Fuel type	Dimension	
Fuel specie	D. Fir	
HHV	19810,0	kJ/kg
%C	48,7	
%H	6,9	
%O	43,9	
%Ash	0,5	
HHV	8519,2	Btu/lb
LHV	7451,0	Btu/lb

Default Fuel Values

	D. Fir	Oak/Maple
HHV	19 810	19 887
%C	48,73	50
%H	6,87	6,6
%O	43,9	42,9
%Ash	0,5	0,5
HHV (Btu/lb)	8519	8552
LHV (Btu/lb)	7451	7480

Data 2016-01-05 EPA PI-20122 run1

	Start	End
Barometer (kPa):	102,6	102,8
Barometer (in.Hg):	30,297769	30,356829
Dry Bulb (F):	66,01	75,74
Humidity (%):	16,9	15
Air velocity (ft/min)	22	20

DGM #1	Final:	12069,986	cuft	Final:	341783,940	Liter
	Initial:	12051,222	cuft	Initial:	341252,610	Liter
DGM #2	Final:	10546,492	cuft	Final:	298643,380	Liter
	Initial:	10528,185	cuft	Initial:	298124,980	Liter
DGM room				Final:	785,750	cuft
				Initial:	773,150	cuft

Numéro de la ligne dans "Raw data" à partir duquel les données du VRAI test commencent 229

Autres données à rentrer: dans preload data, load data, traverse et filter set weight

Project nu.	PI-20122
Date	05-01-2016
Technicien	mm

Preload data sheet

Test Load Weight:

Lower	Ideal	Upper
15,75	17,50	19,25

Load Volume: 0,3750 cu. ft

Loading Density: 5,062 lbs./ft3

Number of Spaces:

Spacer weight (lbs):

Load Density (wet): 33,747 lbs./ft3

Dry Wood Density: 27,388625

Piece Size (in): Thick	Wide	x Length	Weight lbs	Meter Moisture Content Dry Uncorrected %					Ave. MC x Weight	Volume Cubic Inches
2	4	15	2,05	23,3	23	22,9	22,9	23,5	47,396	120,00
2	4	15	2,32	23,6	22,6	22,8	23,5	23,8	53,9632	120,00
2	4	15	2,11	23,7	22,9	22,6	23,8	23,6	49,2052	120,00
2	4	6	0,89	23,5	22,8	23,5	23,9	23,5	20,8616	48,00
2	4	6	0,78	22,8	23,4	23,3	23,5	22,8	18,0648	48,00
2	4	6	0,72	22,6	21,5	23,2	23,5	23	16,3872	48,00
2	4	6	0,71	22,5	23,2	22,8	23,6	23	16,3442	48,00
2	4	6	0,709	23,5	23	22,5	22,8	23,2	16,307	48,00
2	4	6	0,68	23,6	23,6	22,9	23,4	23,5	15,912	48,00
2	4	6	0,858	23,4	23,5	22,8	23,3	23,6	20,00856	48,00
2	4	6	0,828	23,6	22,6	23,6	23,6	23,3	19,32552	48,00
										0,00
										0,00
										0,00
										0,00
										0,00
								SUM MC:	293,77528	

PreTest Load Weight: 12,66 lbs.

Dry Weight: 4,66 kg.

Average Moisture Content: %

Dry: 23,21

23,21

Must be 18-28

Wet: 18,84

must be 15,2-22

Project nu.	PI-20122
Date	05-01-2016
Technicien	M.M

FUEL LOAD DATA SHEET, CSA B415

Test Load Weight:

Lower	Ideal	Upper
15,8	17,5	19,3

* For boilers, a loading density factor of 10 lb/ft3 is applied

Load Volume: 0,48 cu. ft

Loading Density: 6,3 lbs./ft3

Number of Spaces:

Spacer weight: lbs

Load Density (wet): 32,8 lbs./ft3

Dry Wood Density: 27,2 lbs./ft3

Piece Size (in): Thick	Wide	›Length	Weight lbs	Meter Moisture Content Dry Uncorrected %					Ave. MC x Weight	Volume Cubic Inches	Ave. MC %
1,5	3,5	16,25	1,48	23,00	22,60	22,30	22,90	23,60	33,77088	85,31	22,9
1,5	3,5	16,25	1,42	22,00	22,60	22,00	22,10	21,90	31,32192	85,31	22,1
1,5	3,5	16,25	1,39	20,50	20,40	20,30	21,60	21,60	29,06496	85,31	20,9
1,5	3,5	16,25	1,43	20,80	20,00	20,00	20,20	20,00	28,9264	85,31	20,2
3,5	3,5	16,25	4,00	20,70	20,00	20,10	21,10	20,00	81,52	199,06	20,4
3,5	3,5	16,25	3,98	20,00	21,00	20,70	20,00	20,60	81,38988	199,06	20,5
1,5	0,75	5	0,09	19,90					1,7114	5,63	19,9
1,5	0,75	5	0,10	20,60					1,9776	5,63	20,6
1,5	0,75	5	0,09	20,00					1,72	5,63	20,0
1,5	0,75	5	0,09	21,00					1,806	5,63	21,0
1,5	0,75	5	0,10	20,50					2,05	5,63	20,5
1,5	0,75	5	0,09	20,30					1,8676	5,63	20,3
1,5	0,75	5	0,10	20,10					1,9296	5,63	20,1
1,5	0,75	5	0,09	20,10					1,7688	5,63	20,1
1,5	0,75	5	0,09	20,20					1,8584	5,63	20,2
1,5	0,75	5	0,09	20,80					1,9552	5,63	20,8
1,5	0,75	5	0,09	20,50					1,845	5,63	20,5
1,5	0,75	5	0,09	19,90					1,7114	5,63	19,9
1,5	0,75	5	0,09	19,80					1,8216	5,63	19,8
1,5	0,75	5	0,09	20,10					1,809	5,63	20,1
1,5	0,75	5	0,09	20,60					1,854	5,63	20,6
1,5	0,75	5	0,088	20,30					1,7864	5,63	20,3
1,5	0,75	5	0,086	20,2					1,7372	5,63	20,2
1,5	0,75	5	0,088	20,5					1,804	5,63	20,5
1,5	0,75	5	0,114	20,6					2,3484	5,63	20,6
1,5	0,75	5	0,096	20,1					1,9296	5,63	20,1
1,5	0,75	5	0,0132	21					0,2772	5,63	21,0
1,5	0,75	5	0,122	20,6					2,5132	5,63	20,6
1,5	0,75	5	0,1	20,1					2,01	5,63	20,1
1,5	0,75	5	0,09	20					1,8	5,63	20,0
								SUM MCx'	329,88564		20,5 %

Test Load Weight: 15,86 lbs.

Dry Weight: 5,97 kg.

Average Moisture Content: %

Dry: 20,49 Dry(EPA) 20,49

Dry(B415 20,81

20,49 Must be 19-25

Wet: 17,01 must be 15,2-22

Coal Bed Range: 3,2 lbs. to 4,0 lbs.

TEST CHARGE:

Coal bed weight: 3,5 lbs.

Project nu.	PI-20122
Date	05-01-2016
Technicien	M.M

Tunnel Traverse Worksheet (for velocity calculations)

Static Pressure:	0,33	in. H20
Barometer:	29,900	in. Hg

Pour un tunnel de 12" et plus, prendre 6 lectures

	TUNNEL VELOCITY	TUNNEL TEMP	SQUARE ROOT
	In. wc	°F	
A center			0,0000
B center			0,0000
A1			0,0000
A2			0,0000
A3			0,0000
A4			0,0000
A5			0,0000
A6			0,0000
B1			0,0000
B2			0,0000
B3			0,0000
B4			0,0000
B5			0,0000
B6			0,0000
AVERAGE	#DIV/0!	#DIV/0!	0,0000

PITOT CONSTANT=
0,934

Pour un tunnel moins de 12", prendre 4 lectures

	TUNNEL VELOCITY	TUNNEL TEMP	SQUARE ROOT
	In. wc	°F	
A center	0,079	70,89	0,2811
B center	0,078	75,61	0,2793
A1	0,069	74,06	0,2627
A2	0,074	74,16	0,2720
A3	0,074	74,32	0,2720
A4	0,070	74,41	0,2646
B1	0,070	76,00	0,2646
B2	0,074	76,06	0,2720
B3	0,075	76,01	0,2739
B4	0,070	76,13	0,2646
AVERAGE	0,0733	74,7650	0,2707

Project nu.	PI-20122
Date	05-01-2016
Technicien	

Filter set weight

	System 1 (g) 1st hour				System 1 (g)				System 2 (g)				Ambient blank (g)	Date	Heure
	probe	front	back	gasket	probe	front	back	gasket	probe	front	back	gasket	Filter		
Number	4	209	213	7	16	214	215	8	31	217	218	12	219		
Before (1)															
Before (2)															
Before (3)															
Before (4)															
Before (5)	61,3836	0,1263	0,1273	10,2570	108,7541	0,1274	0,1272	10,2070	110,1271	0,1264	0,1251	10,1826	0,1260	04-01-2016	13:00
Before (6)	61,3835	0,1264	0,1274	10,2571	108,7540	0,1274	0,1271	10,2071	110,1270	0,1266	0,1252	10,1837	0,1261	05-01-2016	11:00
After (1)	61,3841	0,1277	0,1272	10,2610	108,7544	0,1277	0,1273	10,2087	110,1272	0,1278	0,1250	10,1870	0,1262	05-01-2016	16:00
After (2)	61,3840	0,1271	0,1265	10,2600	108,7543	0,1272	0,1270	10,2085	110,1272	0,1274	0,1247	10,1860	0,1262	12-01-2015	14:00
After (3)	61,3840	0,1270	0,1265	10,2590	108,7543	0,1270	0,1270	10,2078	110,1272	0,1273	0,1246	10,1860	0,1262	14-01-2016	08:15
After (4)	61,384	0,127	0,1265	10,2590	108,7543	0,127	0,127	10,2078	110,1272	0,1273	0,1246	10,186	0,1262	14-01-2016	16:15
After (5)															
After (6)	61,3840	0,1270	0,1265	10,2590	108,7543	0,1270	0,1270	10,2078	110,1272	0,1273	0,1246	10,1860	0,1262	14-01-2016	16:15
Difference	0,0005	0,0006	-0,0009	0,0019	0,0003	-0,0004	-0,0001	0,0007	0,0002	0,0007	-0,0006	0,0023	0,0001		
Total (mg)		2,1				2,6				2,6			0,1		
Total ajusté (mg)		**2,00**				**2,50**				**2,50**					

"All components of the filter catch are dessicated and weighed before and after each test.
Small PM 2.5 catches may result in negative numbers, because, for example, a small piece of the filter might get stuck to the gasket.
Since all components are dessicated and weighed, we certify that the total weight is accurate. No chemicals or solvents are used to remove PM from the components.

Project nu.	PI-20122
Date	05-01-2016
Technicien	dp

SFBA EPA EMISSION RESULTS

Test Duration: **105** min

PRESSURE FACTOR:	DGM 1	0,98141	
	DGM 2	0,98802	
	DGM 3	1,01361	
TEMPERATURE FACTORS	DGM 1	0,98862	
	DGM 2	0,98757	
	DGM 3	0,99324	
VOLUMES SAMPLED	DGM 1	18,135	SCft
	DGM 2	17,685	Scft
	DGM 3	12,685	SCft

TOTAL TUNNEL VOLUME : 19245

SAMPLE RATIOS

Sample Train 1:	1061,223
Sample Train 2:	1088,208

Paticulate concentration

Sample Train 1	**0,000143**	g/dscf
Sample Train 2	**0,000147**	g/dscf
Room	**0,000008**	g/dscf

TOTAL EMISSIONS

Sample Train 1	**2,61**	g
Sample Train 2	**2,68**	g

EMISSION RATES

Sample Train 1	**1,49**	g/hr
Sample Train 2	**1,53**	g/hr
1st hour emission rate	**2,23**	g/hr

	Train 1	Train 2
Cs	0,0001434	0,000147015

RESULTS

Average emission rate: 1,5 g/hr

Burn Rate : 3,411 Dry kg/hr

BAROMETRIC PRESSURE

Average:	30,327299	in Hg
Start:	30,297769	in Hg
End:	30,356829	in Hg

DGM CONTROLLER VALUES

DGM 1	Final:	12069,986	Cuft
	Initial:	12051,222	Cuft
DGM 2	Final:	10546,492	Cuft
	Initial:	10528,185	Cuft
DGM #3	Final:	785,750	Cuft
	Initial:	773,150	Cuft

TEMPERATURES

DGM 1	534,080	°R
DGM 2	534,646	°R

CALIBRATION FACTORS

DGM 1	0,9961
DGM 2	0,9901
DGM #3	1,0000

TUNNEL FLOW RATE: 183,288 Dscfm

PARTICULATE CATCH

Total Sample Train 1:	2,60	mg
Total Sample Train 2:	2,60	mg
Total Sample Train 1 1st hour:	2,10	mg

DEVIATION: 1,33%

Data 2016-01-05 EPA PI-20122 run1

Manufacturer: ɔodstock Soapstone
Model: 211

Run: 1
Project #: PI-20122
Test Duration: 105 min

	HHV	LHV
Eff	70,71%	76,42%
Comb Eff	99,50%	99,50%
HT Eff	71,06%	76,81%
Output	47 772	kJ/h
Burn Rate	3,41	kg/h
Grams CO	9	g
Input	67 562	kJ/h
MC wet	17,01	

Note: In the "Input data", "Calc. % O_2", "Fuel Properties", and "Mass Balance" columns, [e], [d], [g], [a]. [b], [c], [h], [u], [w], [j], and [k] refer to their respective variables in Clauses 13.7.3

	Ultimate CO_2
$CO_{2\text{-ult}}$	19,64
	F_0
	1,061

Overall Heating Efficiency:	70,71%	
Combustion Efficiency:	99,50%	
Heat Transfer Efficiency:	71,06%	

Air Fuel Ratio (A/F)	
Dry Molecular Weight (M_d)	29,74
Dry Moles Exhaust Gas (N_f):	496,92
Air Fuel Ratio (A/F)	14,27

Heat Output:	45 317 Btu/h	47 772 kJ/h
Heat Input:	64 090 Btu/h	67 562 kJ/h
Burn Duration:	1,75 h	
Burn Rate:	7,52 lb/h	3,410 kg/h
Stack Temp:	459,1 Deg. F	237,3 Deg. C

POLYTESTS
TESTING THROUGH YOUR REALITY

Date: 2016-01-05 Manufacturer: ~~Wood Stove~~ Woodstock Soapstone Mfg. Model: 211

Project #: PT 20122 Run: 1 Tech: MM Reviewer: AP

- START FIRE 14,45 LBS
- laisse porte craquer 2,5 min
- At 14,2 recouvre porte (craquer)
- At 13,2 LBS mettre close Door
- At 8,00 LBS Brasser feux tout ramener vers Milieu
- At 4,00 LBS mettre ~~tapose~~ tapocher Bois
- At 3,55 LBS in sent load
- porte fermer immediatement
- ~~At 9,40 LBS ajouter 0,6 LBS loading~~ mf

TEST LOAD CONFIGURATION

POLYTESTS
TESTING THROUGH YOUR REALITY

PRE / POST CHECKS

Date: 2016-01-05 Manufacturer: Woodstock Soapstone Model: 211
Project #: PI 20122 Run: 1 Tech: MM. Reviewer: DP

	Equipment #	Time	12%	22%
Moisture Meter Calibration Check:	EM-191	7:00	ok	ok

	Pre-Test	Post-Test
Facility Conditions:		
Air Velocity from less than 2 feet	22 (max50 Fpm)	20 (max50 Fpm)
Smoke Capture Check	ok	ok
Picture	4 sides ok	ok
Wood Heater Conditions:		
Date Wood Heater Stack Cleaned	~~2016-01-04~~ M.M. 2016-01-04	
Date Dilution Tunnel Cleaned	2016-01-04	
Induced Draft Check (max 0.005 H2O)	ok	
Traverse before ignition	ok	
Flow Rate 140 cfm ±10%		ok
Temperature System:		
Ambient (65°-90°F)	ok °F	
Wood Heater Surface (±125°F)	ok °F	
Proportional Checks:		
Thermocouple check	ok	
Pitot Clean	ok	
Pitot verification	ok	

Sampling Train ID Numbers:	Train 1st hour	Train 1	Train 2
Probe	04	16	31
Filter Front	209	214	217
Filter Back	213	215	218
Filter Thermocouple	11	11	12
Filter (<90°F)	ok	ok	ok

Rev.2 6/14/2021

POLYTESTS
TESTING THROUGH YOUR REALITY

SAMPLING EQUIPMENT CHECK OUT

Date: 2016-01-05 Manufacturer: Woodstock Soapstone Model: 211

Project #: PT 20122 Run: 1 Tech: MM Reviewer: DP

Leakage Checks Tunnel Samplers

	System 1st hour		System 1		System 2	
Unplugged Flow Rate = .25cfm	Pre-Test ASTM (-15) CSA B415 (-5)	Post-Test (max test)	Pre-Test ASTM (-15) CSA B415 (-5)	Post-Test (Max test)	Pre-Test ASTM (-15) CSA B415 (-5)	Post-Test (Max test)
Vacuum (inches Hg.)	-15	-15	-15	-15	-15	-15
Final 1minute DGM (Liter)	341251,93	341784,73	341253,14	341784,84	298124,27	298644,10
Initial 1minute DGM (Liter)	341251,92	341784,69	341252,13	341784,81	298124,26	298644,09
Change © (Liter)	0,01	0,04	0,01	0,03	0,01	0,01
Allowable leakage .04 x Sample rate or 0.28Lpm CSA B415 (0.56)						
Check OK	ok	ok	ok	ok	ok	ok

Leakage Checks Flue Gas Sampler

Plugged Probe	Pre Test	Post Test
Vacuum (inches Hg.)	-5	-5
Rotometer Reading (mml/min.)	0	10
Flow Rate (lpm)	1.5	1.5
Allowable (.02 x Sample Rate)	30	30
Check OK	ok	ok

Leakage Checks Pitot

Plugged Probe	Pre Test 3 H2o static	Pre Test 0.4-0.5 H2o velocity	Post Test 3 H2o Static	Post Test 0.4-0.5 H2o velocity
Vacuum (inches Hg.)	3	.4	3	.5
Check OK (no change after 15 sec.)	ok	ok	ok	ok

POLYTESTS
TESTING THROUGH YOUR REALITY

PRE-TEST SCALE AUDIT

Date: 2016-04-05 Manufacturer: Wood Stock Soapstone Model: 211
Project #: PI 20122 Run: 1 Tech: MM Reviewer: DP

Scale Type	Audit		Measured Weight
	Equipment #	Weight	
Platform	EM-090	4.4 lbs, Class F	4.4 lbs
Wood	EM-090	4.4 lbs, Class F	4.4 lbs
Analytical	EM-128	100 mg, Class S	100 mg
Analytical	EM-129	200 g, Class S	200 g

LIMITS OF WEIGHT RANGES

ANALYTICAL SCALE: ..... 50%-150% of dry filter weight, ± 0.1 mg
PLATFORM SCALE.....20%-80% of ideal test load weight, ± 0.1 lbs or 1%
WOOD SCALE .....20%-80% of ideal test load weight, ± 0.01 lbs or 1%

POLYTESTS
TESTING THROUGH YOUR REALITY

CONTINUOUS ANALYZERS

Date: 2016-01-05 Manufacturer: Woodstock soapstone Model: 211
Project #: pI 20122 Run: 1 Tech: MM Reviewer: bP

FOR TUNNELS < 12 in

Barometric pressure (P_{bar}) 102,6 (KPa.) Static pressure (P_q) 0,33 (inches w.c.)
Inside diameter: Port A _____ Port B ____.
Tunnel cross sectional area: .1963Ft^2
Pitot tube type: Standard

Traverse Point	Position (inches)			Velocity Head Δ_p (inches H_2O)	Tunnel Temperature (°F)	$\sqrt{\Delta_p}$
	6 po	7 po	8 po			
A- Centroid	3.00	3.50	4	0,079	70,89	
B - Centroid	3.00	3.50	4	0,078	75,61	
A-1	0.40	0.50	0.50	0,069	74,06	
A-2	1.50	1.75	2	0,074	74,16	
A-3	4.50	5.25	6	0,074	74,32	
A-4	5.60	6.5	7.5	0,070	74,41	
B-1	0.40	0.50	0.50	0,070	76,00	
B-2	1.50	1.75	2	0,074	76,06	
B-3	4.50	5.25	6	0,075	76,01	
B-4	5.60	6.5	7.5	0,070	76,13	
				AVERAGE		bP

$$v_s = K_p C_p (\sqrt{\Delta p})_{avg} \sqrt{\frac{(T_s)_{avg}}{P_s M_s}}$$

Where,
C_p = pitot tube coefficient, dimension less = 0.99 for standard pitot.
Δ_p = manometer reading (inches H_2O)
T_s = average absolute dilution tunnel temperature (°F + 460)
P_s = absolute dilution tunnel gas pressure or $P_{bar} + P_{qg}$
P_q = static pressure $\frac{\text{in. } H_2O}{\{\ 13.6\ \}}$
M_s = 28.56, wet molecular weight of stack gas (alternatively, it may be measured)
K_p = 85.49 pitot tube constant, (conversion factor for English units)

$_\Delta_p$avg. = average of the square roots of the velocity heads (Δ_p) measured at each traverse point.

POLYTESTS
TESTING THROUGH YOUR REALITY

CONTINUOUS ANALYZERS

Date: 2016-01-05 Manufacturer: Woodstock Soapstone Model: 211
Project #: PI 20122 Run: 1 Tech: M M Reviewer: DP

Pre-Test (Adjust and Record)

	ZERO		SPAN		CAL. (Record Only)	
CO	0	0	2.963	2.931	0.999	1.00
Tolerance CO		+/- 0.02		+/- 0.15		+/- 0.05
CO_2	0	0	17.85	17.87	9.73	10.00
Tolerance CO2		+/- 0.02		+/- 0.5		+/- 0.5
O_2 informative CSA B415 calculated value	N.A	N.A	N.A	N.A	N.A	N.A
	Actual	Should Be	Actual	Should Be	Actual	Should Be

Post Test (Record Only)

	Zero	Span	Cal.	Zero Drift	Limit	Span Drift	Limit	Cal. Drift	Limit	OK?	Not OK*
CO	0.004	2.962	1.025	0.009	0.02	0.001	0.15	0.026	0.05	✓	
CO_2	0	17.82	9.83	0	0.02	0.03	0.5	0.04	0.5	✓	
O_2	N.A	N.A	N.A	N.A	na	N.A	na	N.A	na	N.A	N.A

POLYTESTS
TESTING THROUGH YOUR REALITY

TEST DATA LOG

Date: 2016-01-05 Manufacturer: Woodstock soapstone Model: 211

Project #: PI 20122 Run: 1 Tech: MM Reviewer: DP

RAW DRY GAS METER READINGS

	System 1 MM	System 2	~~System 2~~ Blank
Final (Liter)	341 783, 94 ~~341 783, 94~~	298643, 38	785, 75
Initial (Liter)	341252,61	298124, 98	773,15
Flow meter (Liter)	N.A	N.A	N.A

AMBIENT CONDITIONS

	Before	After
Barometer (kPa):	102,6	103,8
Dry Bulb (F):	66,01	75,74
Humidity (%):	16,9	15

POLYTESTS
TESTING THROUGH YOUR REALITY

FUEL DATA

Date: 2016-01-05 Manufacturer: Wood Stock Soapstone Model: 211
Project #: pI 20122 Run: 1 Tech: Mm Reviewer: DO

FUEL DESCRIPTION:

Type of wood :

PRE-TEST LOAD

Piece Size	Weight	Meter Moisture Content (% dry)*				
2 x 4 x 15 in.	2.05 lbs.	23.3	23.0	22.9	22.9	23.5
2 x 4 x 15 in.	2.32 lbs.	23.6	22.6	22.8	23.5	23.8
2 x 4 x 15 in.	2.11 lbs.	23.7	22.9	22.6	23.8	23.6
2 x 4 x 6 in.	0.89 lbs.	23.5	22.8	23.5	23.9	23.5
2 x 4 x 6 in.	0.78 lbs.	22.2	23.4	23.3	23.5	22.8
2 x 4 x 6 in.	0.72 lbs.	22.6	23.5	23.2	23.5	23.0
2 x 4 x 6 in.	0.71 lbs.	22.5	23.2	22.8	23.6	23.0
2 x 4 x 6 in.	0.79 lbs.	23.5	23.0	22.5	22.8	23.2
2 x 4 x 6 in.	0.68 lbs.	23.6	23.6	22.9	23.4	23.5
2 x 4 x 6 in.	0.858 lbs.	23.4	23.5	22.8	23.3	23.6
2 x 4 x 6 in.	0.828 lbs.	23.6	22.6	23.6	23.6	23.3
x x in.	lbs.					
x x in.	lbs.					
x x in.	lbs.					
x x in.	lbs.					
x x in.	lbs.					
x x in.	lbs.					
x x in.	lbs.					

TEST LOAD WEIGHT: 12.64 lbs

Rev.2 6/14/2021

POLYTESTS
TESTING THROUGH YOUR REALITY

FUEL DATA

Date: 2016-01-05 Manufacturer: Woodstock Soapstone Model: 211

Project #: PI 20122 Run: 1 Tech: MM Reviewer: DP

FUEL DESCRIPTION:

Type of wood :

TEST LOAD

Piece Size	Weight		Meter Moisture Content (% dry)*				
1 1/2 x 3 1/2 x 16 1/4 in.	1,476	lbs.	23,6	23,6	22,3	22,9	23,6
1 1/2 x 3 1/2 x 16 1/4 in.	1,416	lbs.	22,0	22,6	22,0	22,1	21,9
1 1/2 x 3 1/2 x 16 1/4 in.	1,392	lbs.	20,5	20,4	20,3	21,6	21,6
1 1/2 x 3 1/2 x 16 1/4 in.	1,432	lbs.	20,8	20,0	20,0	20,2	20,6
3 1/2 x 3 1/2 x 16 1/4 in.	4,00	lbs.	20,3	20,0	20,1	21,1	20,0
3 1/2 x 3 1/2 x 16 1/4 in.	3,978	lbs.	20	21	20,1	20	20,6
1 1/2 x 3/ x 5 in.	0,086	lbs.			19,9		
1 1/2 x 3/4 x 5 in.	0,096	lbs.			20,6		
1 1/2 x 3/4 x 5 in.	0,086	lbs.			20,0		
1 1/2 x 3/4 x 5 in.	0,086	lbs.			21,0		
1 1/2 x 3/4 x 5 in.	~~0,0~~ MM 0,100	lbs.			20,5		
1 1/2 x 3/4 x 5 in.	0,092	lbs.			20,3		
1 1/2 x 3/4 x 5 in.	0,096	lbs.			20,1		
1 1/2 x 3/4 x 5 in.	0,088	lbs.			20,1		
1 1/2 x 3/4 x 5 in.	0,092	lbs.			20,2		
1 1/2 x 3/4 x 5 in.	0,094	lbs.			20,8		
1 1/2 x 3/4 x 5 in.	0,090	lbs.			20,5		
1 1/2 x 3/4 x 5 in.	0,086	lbs.			19,9		
1 1/2 x 3/4 x 5 in.	0,092	lbs.			19,8		
1 1/2 x 3/4 x 5 in.	0,090	lbs.			20,1		
1 1/2 x 3/4 x 5 in.	0,090	lbs.			20,6		
1 1/2 x 3/4 x 5 in.	0,088	lbs.			20,3		
1 1/2 x 3/4 x 5 in.	0,086	lbs.			20,2		

TEST LOAD WEIGHT: _____ lbs

Min 20%: .....

Max 25%: _____

Rev.2 6/14/2021

POLYTESTS
TESTING THROUGH YOUR REALITY

FUEL DATA

Date: ~~2016-08-05~~ 2021-05-05 N.S. Manufacturer: Woodstock Soapstone Model: 211

Project #: PI 20122 Run: 1 Tech: MM Reviewer: DD

FUEL DESCRIPTION:
Type of wood : Suite

TEST LOAD

Piece Size	Weight	Meter Moisture Content (% dry)*				
1 1/2 x 3/4 x 5 in.	0.088 lbs.			20.5		
1 1/2 x 3/4 x 5 in.	0.114 lbs.			20.6		
1 1/2 x 3/4 x 5 in.	0.096 lbs.			20.1		
1 1/2 x 3/4 x 5 in.	0.132 lbs.			21.0		
1 1/2 x 3/4 x 5 in.	0.122 lbs.			20.6		
1 1/2 x 3/4 x 5 in.	0.100 lbs.			20.1		
1 1/2 x 3/4 x 5 in.	0.090 lbs.			20.0		
x x in.	lbs.					
x x in.	lbs.					
x x in.	lbs.					
x x in.	lbs.					
x x in.	lbs.					
x x in.	lbs.					
x x in.	lbs.					
x x in.	lbs.					
x x in.	lbs.					
x x in.	lbs.					
x x in.	lbs.					
x x in.	lbs.					
x x in.	lbs.					
x x in.	lbs.					
x x in.	lbs.					
x x in.	lbs.					

TEST LOAD WEIGHT: 16.00 lbs

Min 20%: 3.20

Max 25%: 4.00

POLYTESTS
TESTING THROUGH YOUR REALITY

DILUTION TUNNEL PARTICULATE SAMPLER DATA

Date: 2016-01-04 Manufacturer: Wood Stove Soap Stowe Model: 211

Project #: PT 20122 Run: 1 Tech: MM Reviewer: DP

Rev.2 6/14/2021

Pre-test Weight Record		SYSTEM 1 – 1st hour				SYSTEM 1				
		Probe & Housing Number	Front Filter Number	Back Filter Number	gaskets	Probe & Housing Number	Front Filter Number	Back Filter Number	gaskets	Blanck
Date	Time	004	209	213	7	16	214	215	8	219
2016-01-04	13:00	61,3836	0,1263	0,1273	10,2570	108,7541	0,1274	0,1272	10,2070	0,1260
2016-01-05	11:00	61,3835	0,1264	0,1274	10,2571	108,7540	0,1274	0,1271	10,2071	0,1261

Post-test Weight Record		SYSTEM 1 – 1st hour				SYSTEM 1				
		Probe & Housing Number	Front Filter Number	Back Filter Number	gaskets	Probe & Housing Number	Front Filter Number	Back Filter Number	gaskets	Blanck
Date	Time	004	209	213	7	16	214	215	8	219
2016-01-05	16:00	61,3841	0,1277	0,1272	10,2610	108,7544	0,1277	0,1273	10,2087	0,1262
2016-01-12	14:00	61,3840	0,1271	0,1265	10,2600	108,7543	0,1272	0,1270	10,2085	0,1262
2016-01-14	8:15	61,3840	0,1270	0,1265	10,2590	108,7543	0,1270	0,1270	10,2078	0,1262
2016-01-14	16:15	61,3840	0,1270	0,1265	10,2590	108,7543	~~0,1270~~ 0,1270 M.R.	0,1270	10,2078	0,1262

POLYTESTS
TESTING THROUGH YOUR REALITY

DILUTION TUNNEL PARTICULATE SAMPLER DATA

Date: 2016-01-04 Manufacturer: Woodstock Soapstone Model: 211

Project #: PL 20122 Run: 1 Tech: MM Reviewer: NO

Pre-test Weight Record		SYSTEM 2			
		Probe & Housing Number	Front Filter Number	Back Filter Number	gaskets
Date	Time	31	217	218	12
2016-01-04	13:00	110,1271	0,1264	0,1251	10,1836
2016-01-05	11:00	110,1270	0,1266	0,1252	10,1837

Post-test Weight Record		SYSTEM 2			
		Probe & Housing Number	Front Filter Number	Back Filter Number	gaskets
Date	Time	31	217	218	12
2016-01-05	16:00	110,1272	0,1278	0,1250	10,1870
2016-01-12	14:00	110,1272	0,1274	0,1247	10,1860
2016-01-14	8:15	110,1272	0,1273	0,1246	10,1860
2016-01-14	16:15	110,1272	0,1273	0,1246	10,1860

Rev.2 6/14/2021

Paramètres

Tous les facteurs de corrections et autres paramètres qui peuvent être modifiés par l'utilisateur du fichier sont regroupés ici.

Code verrouillage:	WOO	

Description du test

Test standard	EPA	
Run #	2	
Date	07-01-2016	
Technicien	M.M	
Project #	PI-20122	

Description de l'unité

Manufacturier	Woodstock Soapstone	
Modèle	211	
Combustion system	Cat	
Appliance type	Hybrid woodstove	
Firebox volume	2,5	cu ft.
Appliance weight empty	600	lbs
Appliance weight full	600	lbs

Paramètres du test

Logging time	1	min
Manufacturer's rated heat output	na	BTU/h Donnée fournie par le manfacturier
Targeted category	1	
Targeted output	à définir	BTU/h
Cp steel	0,1	BTU/lb-°F

Échantillonnage

Blank sampling rate	0,20	cuft/min
Internal probe diameter	0,18	in.
Calibration Factor (DGM #1):	0,996	Dimensionless
Equipment number (DGM #1):	EM-178	
Calibration Factor (DGM #2):	0,990	Dimensionless
Equipment number (DGM #2):	EM-179	
Calibration Factor (DGM #3):	1,000	
Equipment number (DGM #3):	EM-070	Dimensionless

Tunnel

Targeted tunnel flow rate	160	scfm
Tunnel diameter	6	in.
Molecular weight	29	
Pitot tube type	Standard	
Pitot tube coefficient	0,99	Dimensionless

Project nu.	PI-20122
Date	07-01-2016
Technicien	M.M

Fuel data

Fuel type	Dimension	
Fuel specie	D. Fir	
HHV	19810,0	kJ/kg
%C	48,7	
%H	6,9	
%O	43,9	
%Ash	0,5	
HHV	8519,2	Btu/lb
LHV	7451,0	Btu/lb

Default Fuel Values

	D. Fir	Oak/Maple
HHV	19 810	19 887
%C	48,73	50
%H	6,87	6,6
%O	43,9	42,9
%Ash	0,5	0,5
HHV (Btu/lb)	8519	8552
LHV (Btu/lb)	7451	7480

Data 2016-01-07 EPA PI-20122 run2

	Start	End
Barometer (kPa):	102,8	102,8
Barometer (in.Hg):	30,356829	30,356829
Dry Bulb (F):	69,44	69,44
Humidity (%):	20,8	20,8
Air velocity (ft/min)	26	22

DGM #1	Final:	12107,147	cuft	Final:	342836,210	Liter
	Initial:	12071,323	cuft	Initial:	341821,790	Liter
DGM #2	Final:	10582,626	cuft	Final:	299666,600	Liter
	Initial:	10547,973	cuft	Initial:	298685,320	Liter
DGM room				Final:	809,130	cuft
				Initial:	786,700	cuft

Numéro de la ligne dans "Raw data" à partir duquel les données du VRAI test commencent: 251

Autres données à rentrer: dans preload data, load data, traverse et filter set weight

Project nu.	PI-20122
Date	07-01-2016
Technicien	M.M

Preload data sheet

Test Load Weight:

Lower	Ideal	Upper
15,75	17,50	19,25

Load Volume: 0,3750 cu. ft

Loading Density: 4,623 lbs./ft3

Number of Spaces:

Spacer weight (lbs):

Load Density (wet): 30,821 lbs./ft3

Dry Wood Density: 24,999345

Piece Size (in): Thick	Wide	x Length	Weight lbs	Meter Moisture Content Dry Uncorrected %					Ave. MC x Weight	Volume Cubic Inches
2	4	15	1,696	23,8	22,4	23,1	22,8	22,9	39,008	120,00
2	4	15	1,774	23,6	23,6	23,7	23,7	23,8	42,00832	120,00
2	4	15	1,852	23	23,6	23,2	23,2	23	42,9664	120,00
2	4	6	0,692	22,8	22,9	23,3	23,3	22,9	15,94368	48,00
2	4	6	0,95	22,9	23,8	23,7	23,7	23,7	22,382	48,00
2	4	6	0,734	23,6	23,9	22,8	22,8	22,6	16,98476	48,00
2	4	6	0,726	23,5	22,8	23	23	23	16,74156	48,00
2	4	6	0,792	23,6	23,3	23,7	23,7	23,5	18,65952	48,00
2	4	6	0,824	23,9	23,3	23,2	23,2	23,6	19,31456	48,00
2	4	6	0,844	23,8	23,9	22,9	22,9	22,8	19,63144	48,00
2	4	6	0,674	23	22,8	23	23	23,4	15,52896	48,00
										0,00
										0,00
										0,00
										0,00
										0,00
								SUM MC:	269,1692	

PreTest Load Weight: 11,56 lbs.

Dry Weight: 4,25 kg.

Average Moisture Content: %

Dry: 23,29

23,29

Must be 18-28

Wet: 18,89

must be 15,2-22

Project nu.	PI-20122
Date	07-01-2016
Technicien	M.M

FUEL LOAD DATA SHEET, CSA B415

Test Load Weight:

Lower	Ideal	Upper
15,8	17,5	19,3

* For boilers, a loading density factor of 10 lb/ft3 is applied

Load Volume: 0,55 cu. ft

Loading Density: 6,5 lbs./ft3

Number of Spaces: 24

Spacer weight: lbs

Load Density (wet): 29,1 lbs./ft3

Dry Wood Density: 24,2 lbs./ft3

Piece Size (in): Thick	Wide	›Length	Weight lbs	Meter Moisture Content Dry Uncorrected %					Ave. MC x Weight	Volume Cubic Inches	Ave. MC %
1,5	3,5	16	1,45	20,30	20,60	20,90	21,10	21,60	30,2214	84,00	20,9
1,5	3,5	16	1,35	20,60	20,10	20,30	19,90	20,90	27,52672	84,00	20,4
1,5	3,5	16	1,58	20,10	20,90	21,10	20,50	20,10	32,41212	84,00	20,5
1,5	3,5	16	1,57	20,50	20,80	20,10	20,90	20,60	32,3106	84,00	20,6
3,5	3,5	16	4,05	20,60	20,90	19,80	19,90	20,10	81,97196	196,00	20,3
3,5	3,5	16	4,02	20,60	20,10	19,90	20,60	20,90	82,12924	196,00	20,4
1,5	0,75	5	0,11			20,10			2,2914	5,63	20,1
1,5	0,75	5	0,09			21,60			1,944	5,63	21,6
1,5	0,75	5	0,09			21,00			1,806	5,63	21,0
1,5	0,75	5	0,09			22,10			1,9006	5,63	22,1
1,5	0,75	5	0,10			19,80			1,98	5,63	19,8
1,5	0,75	5	0,09			19,90			1,7512	5,63	19,9
1,5	0,75	5	0,09			20,10			1,7688	5,63	20,1
1,5	0,75	5	0,09			20,60			1,7716	5,63	20,6
1,5	0,75	5	0,09			20,30			1,827	5,63	20,3
1,5	0,75	5	0,09			20,50			1,845	5,63	20,5
1,5	0,75	5	0,09			19,80			1,7028	5,63	19,8
1,5	0,75	5	0,09			19,50			1,677	5,63	19,5
1,5	0,75	5	0,09			19,60			1,7248	5,63	19,6
1,5	0,75	5	0,084			19,30			1,6212	5,63	19,3
1,5	0,75	5	0,088			19,90			1,7512	5,63	19,9
1,5	0,75	5	0,086			20,10			1,7286	5,63	20,1
1,5	0,75	5	0,086			20,6			1,7716	5,63	20,6
1,5	0,75	5	0,088			19,9			1,7512	5,63	19,9
1,5	0,75	5	0,096			20,6			1,9776	5,63	20,6
1,5	0,75	5	0,088			20,4			1,7952	5,63	20,4
1,5	0,75	5	0,086			20,3			1,7458	5,63	20,3
1,5	0,75	5	0,098			20,1			1,9698	5,63	20,1
1,5	0,75	5	0,086			19,8			1,7028	5,63	19,8
1,5	0,75	5	0,088			19,7			1,7336	5,63	19,7
								SUM MCx'	330,11084		20,3 %

Test Load Weight: 16,17 lbs.

Dry Weight: 6,10 kg.

Average Moisture Content: %

Dry: 20,29 Dry(EPA) 20,29

Dry(B415 20,42

20,29

Must be 19-25

Wet: 16,87

must be 15,2-22

Coal Bed Range: 3,2 lbs. to 4,0 lbs.

TEST CHARGE:

Coal bed weight: 3,65 lbs.

Project nu.	PI-20122
Date	07-01-2016
Technicien	M.M

Tunnel Traverse Worksheet (for velocity calculations)

Static Pressure:	0,28	in. H20
Barometer:	29,900	in. Hg

Pour un tunnel de 12" et plus, prendre 6 lectures

	TUNNEL VELOCITY	TUNNEL TEMP	SQUARE ROOT
	In. wc	°F	
A center			0,0000
B center			0,0000
A1			0,0000
A2			0,0000
A3			0,0000
A4			0,0000
A5			0,0000
A6			0,0000
B1			0,0000
B2			0,0000
B3			0,0000
B4			0,0000
B5			0,0000
B6			0,0000
AVERAGE	#DIV/0!	#DIV/0!	0,0000

PITOT CONSTANT=
0,937

Pour un tunnel moins de 12", prendre 4 lectures

	TUNNEL VELOCITY	TUNNEL TEMP	SQUARE ROOT
	In. wc	°F	
A center	0,066	72,1	0,2569
B center	0,065	71,01	0,2550
A1	0,056	74,08	0,2366
A2	0,063	72,68	0,2510
A3	0,067	71,77	0,2588
A4	0,060	70,05	0,2449
B1	0,056	71,430	0,2366
B2	0,061	71,670	0,2470
B3	0,063	71,880	0,2510
B4	0,057	71,850	0,2387
AVERAGE	0,0614	71,8520	0,2477

Project nu.	PI-20122
Date	07-01-2016
Technicien	M.M

Filter set weight

	System 1 (g) 1st hour				System 1 (g)				System 2 (g)				Ambient blank (g)	Date	Heure
	probe	front	back	gasket	probe	front	back	gasket	probe	front	back	gasket	Filter		
Number	10	225	226	6	11	227	229	11	13	230	231	21	232		
Before (1)															
Before (2)															
Before (3)															
Before (4)															
Before (5)	94,6421	0,1264	0,1262	10,3151	93,7276	0,1242	0,1268	10,3103	95,1524	0,1251	0,1265	10,2246	0,1281	2016-01-06	17:00
Before (6)	94,6422	0,1264	0,1262	10,3153	93,7277	0,1243	0,1268	10,3104	95,1525	0,1252	0,1265	10,2246	0,1280	2016-01-07	08:00
After (1)	94,6431	0,1336	0,1256	10,3188	93,7277	0,1249	0,1270	10,3119	95,1529	0,1316	0,1258	10,2280	0,1281	2016-01-07	15:30
After (2)	94,6430	0,1328	0,1255	10,3180	93,7277	0,1246	0,1270	10,3115	95,1528	0,1316	0,1258	10,2270	0,1281	2016-01-11	14:30
After (3)	94,6428	0,1328	0,1255	10,3177	93,7277	0,1246	0,1270	10,3111	95,1528	0,1316	0,1258	10,2270	0,1281	2016-01-14	08:00
After (4)	94,6428	0,1328	0,1255	10,3177	93,7277	0,1246	0,127	10,3111	95,1528	0,1316	0,1258	10,227	0,1281	2016-01-14	16:00
After (5)															
After (6)	94,6428	0,1328	0,1255	10,3177	93,7277	0,1246	0,127	10,3111	95,1528	0,1316	0,1258	10,227	0,1281	2016-01-14	16:00

Difference	0,0006	0,0064	-0,0007	0,0024	0,0000	0,0003	0,0002	0,0007	0,0003	0,0064	-0,0007	0,0024	0,0001
Total (mg)		8,7				9,9				8,4			0,1
Total ajusté (mg)		**8,60**				**9,80**				**8,30**			

"All components of the filter catch are dessicated and weighed before and after each test.
Small PM 2.5 catches may result in negative numbers, because, for example, a small piece of the filter might get stuck to the gasket.
Since all components are dessicated and weighed, we certify that the total weight is accurate. No chemicals or solvents are used to remove PM from the components.

Project nu.	PI-20122
Date	07-01-2016
Technicien	M.M

SFBA EPA EMISSION RESULTS

Test Duration: **198** min

PRESSURE FACTOR:	DGM 1	0,98406	
	DGM 2	0,99168	
	DGM 3	1,01460	
TEMPERATURE FACTORS	DGM 1	0,98626	
	DGM 2	0,98526	
	DGM 3	0,98958	
VOLUMES SAMPLED	DGM 1	34,634	SCft
	DGM 2	33,522	Scft
	DGM 3	22,520	SCft
TOTAL TUNNEL VOLUME :		34443	

SAMPLE RATIOS

Sample Train 1:	994,481
Sample Train 2:	1027,488

Paticulate concentration

Sample Train 1	**0,000286**	g/dscf
Sample Train 2	**0,000251**	g/dscf
Room	**0,000004**	g/dscf

TOTAL EMISSIONS

Sample Train 1	**9,69**	g
Sample Train 2	**8,48**	g

EMISSION RATES

Sample Train 1	**2,94**	g/hr
Sample Train 2	**2,57**	g/hr
1st hour emission rate	**8,65**	g/hr

	Train 1	Train 2
Cs	0,0002858	0,000250585

RESULTS

Average emission rate: 2,8 g/hr

Burn Rate : 1,847 Dry kg/hr

BAROMETRIC PRESSURE

Average:	30,356829	in Hg
Start:	30,356829	in Hg
End:	30,356829	in Hg

DGM CONTROLLER VALUES

DGM 1	Final:	12107,147	Cuft
	Initial:	12071,323	Cuft
DGM 2	Final:	10582,626	Cuft
	Initial:	10547,973	Cuft
DGM #3	Final:	809,130	Cuft
	Initial:	786,700	Cuft

TEMPERATURES

DGM 1	535,356	°R
DGM 2	535,900	°R

CALIBRATION FACTORS

DGM 1	0,9961
DGM 2	0,9901
DGM #3	1,0000

TUNNEL FLOW RATE: 173,955 Dscfm

PARTICULATE CATCH

Total Sample Train 1:	9,90	mg
Total Sample Train 2:	8,40	mg
Total Sample Train 1 1st hour:	8,70	mg

DEVIATION: 6,68%

Data 2016-01-07 EPA PI-20122 run2

Manufacturer: Woodstock Soapstone
Model: 211

Run: 2
Project #: PI-20122
Test Duration: 198 min

	HHV	LHV
Eff	75,59%	81,70%
Comb Eff	99,50%	99,50%
HT Eff	75,97%	82,11%
Output	27 671	kJ/h
Burn Rate	1,85	kg/h
Grams CO	22	g
Input	36 605	kJ/h
MC wet	16,87	

Note: In the "Input data", "Calc. % O_2", "Fuel Properties", and "Mass Balance" columns, [e], [d], [g], [a]. [b], [c], [h], [u], [w], [j], and [k] refer to their respective variables in Clauses 13.7.3

Ultimate CO_2
$CO_{2\text{-ult}}$ 19,64
F_0
1,061

Overall Heating Efficiency:	75,59%	Air Fuel Ratio (A/F)
Combustion Efficiency:	99,50%	Dry Molecular Weight (M_d) 29,70
Heat Transfer Efficiency:	75,97%	Dry Moles Exhaust Gas (N_f): 517,60
		Air Fuel Ratio (A/F) 14,86

Heat Output:	26 249	Btu/h	27 671	kJ/h
Heat Input:	34 724	Btu/h	36 605	kJ/h
Burn Duration:	3,30	h		
Burn Rate:	4,07	lb/h	1,848	kg/h
Stack Temp:	329,7	Deg. F	165,4	Deg. C

POLYTESTS
TESTING THROUGH YOUR REALITY

Date: 20-01-07 Manufacturer: WOOD stock SOAPSTONE Model: 211
Project #: PI 2012 Run: 1 Tech: MX Reviewer: NP

- 3 morceau a plat avec kindling 6,7 LBS
START FIRE
- Dt 5,7 LBS ajouter 0,5 LBS kindling
- Dt 5,5 LBS insert 8x 6"
- Dt 9,6 LBS ferme un peu la porte (dans la coche)
- Dt 7,8 close Air inlet
- Dt 3,65 insert load
- laisse porte ouverte (craquer) 5 min
- close air inlet 5 min

temps 3:19

TEST LOAD CONFIGURATION

POLYTESTS
TESTING THROUGH YOUR REALITY

Date:_____ Manufacturer:_____ Model:_____

Project #: _____ Run:_____ Tech:_____ Reviewer:_____

Rev.2 6/14/2021

Side view	Front view	Top view

POLYTESTS
TESTING THROUGH YOUR REALITY

Date:_____ Manufacturer:_____ Model:_____

Project #: _____ Run:_____ Tech:_____ Reviewer:_____

	ADDITION		SUBSTRACTION	
	ft3	Volume	ft3	Volume
V measure				
V ashlip				
%				
V usable				

Usable Firebox:_____

Test load weight:_____ Minimum:_____ Maximum:_____

Déviation:_____

POLYTESTS
TESTING THROUGH YOUR REALITY

PRE / POST CHECKS

Date: 2016-01-03 Manufacturer: Wood Stock Soap Stone Model: 211

Project #: pI 20122 Run: 2 Tech: MM Reviewer: BP

Moisture Meter Calibration Check:

Equipment #	Time	12%	22%
EM-191	7:00	ok	ok

Pre-Test Post-Test

Facility Conditions:

	Pre-Test	Post-Test
Air Velocity from less than 2 feet	26 (max50 Fpm)	22 (max50 Fpm)
Smoke Capture Check	ok	ok
Picture (4 sides)	ok	ok

Wood Heater Conditions:

Date Wood Heater Stack Cleaned	2016-01-04
Date Dilution Tunnel Cleaned	2016-01-04
Induced Draft Check (max 0.005 H2O)	ok
Traverse before ignition	ok
Flow Rate 140 cfm ±10%	ok

Temperature System:

Ambient (65°-90°F)	ok	°F
Wood Heater Surface (±125°F)	ok	°F

Proportional Checks:

Thermocouple check	ok
Pitot Clean	ok
Pitot verification	ok

Sampling Train ID Numbers:

	Train 1st hour	Train 1	Train 2
Probe	10	11	13
Filter Front	225	227	230
Filter Back	226	229	231
Filter Thermocouple	11	11	12
Filter (<90°F)	ok	ok	ok

Rev.2 6/14/2021

POLYTESTS
TESTING THROUGH YOUR REALITY

SAMPLING EQUIPMENT CHECK OUT

Date: 2016-01-07 Manufacturer: WOOD stock soapstone Model: 211

Project #: pI 20122 Run: 2 Tech: MM Reviewer: RS

Leakage Checks Tunnel Samplers

	System 1st hour		System 1		System 2	
Unplugged Flow Rate = .25cfm	Pre-Test ASTM (-15) CSA B415 (-5)	Post-Test (max test)	Pre-Test ASTM (-15) CSA B415 (-5)	Post-Test (Max test)	Pre-Test ASTM (-15) CSA B415 (-5)	Post-Test (Max test)
Vacuum (inches Hg.)	-15	-15	-15	-15	-15	-15
Final 1minute DGM (Liter)	341820,83	342836,83	341820,99	342836,90	298684,78	299667,30
Initial 1minute DGM (Liter)	341820,81	342836,81	341820,98	342836,89	298684,78	299667,29
Change © (Liter)	0,02	0,02	0,01	0,01	∅	0,01
Allowable leakage .04 x Sample rate or 0.28Lpm CSA B415 (0.56)						
Check OK	ok	ok	ok	ok	ok	ok

Leakage Checks Flue Gas Sampler

Plugged Probe		Pre Test	Post Test
Vacuum (inches Hg.)		-5	-5
Rotometer Reading (mml/min.)		0	5
Flow Rate (lpm)		1.5	1.5
Allowable (.02 x Sample Rate)		30	30
Check OK		ok	ok

Leakage Checks Pitot

Plugged Probe	Pre Test 3 H2o static	Pre Test 0.4-0.5 H2o velocity	Post Test 3 H2o Static	Post Test 0.4-0.5 H2o velocity
Vacuum (inches Hg.)	3	.5	3	.5
Check OK (no change after 15 sec.)	ok	ok	ok	ok

POLYTESTS
TESTING THROUGH YOUR REALITY

PRE-TEST SCALE AUDIT

Date: 2016-01-07 Manufacturer: Wood stock Soapstone Model: 211
Project #: PI 20122 Run: 2 Tech: M M. Reviewer: DP

Scale Type	Audit		Measured Weight
	Equipment #	Weight	
Platform	EM-090	4.4 lbs, Class F	4.4 lbs
Wood	EM-090	4.4 lbs, Class F	4.4 lbs
Analytical	EM-128	100 mg, Class S	100 mg
Analytical	EM-129	200g, Class S	200 g

LIMITS OF WEIGHT RANGES

ANALYTICAL SCALE: ..... 50%-150% of dry filter weight, ± 0.1 mg
PLATFORM SCALE..... 20%-80% of ideal test load weight, ± 0.1 lbs or 1%
WOOD SCALE ..... 20%-80% of ideal test load weight, ± 0.01 lbs or 1%

POLYTESTS
TESTING THROUGH YOUR REALITY

CONTINUOUS ANALYZERS

Date: 2016-01-07 Manufacturer: WOOD stock Soapstone Model: 211
Project #: pI 20122 Run: 2 Tech: MM Reviewer: DP

FOR TUNNELS < 12 in

Barometric pressure (P_{bar}) 102,8 (KPa.) Static pressure (P_q) 0,28 (inches w.c.)
Inside diameter: Port A _____ Port B ____.
Tunnel cross sectional area: .1963Ft^2
Pitot tube type: Standard

Traverse Point	Position (inches)			Velocity Head Δ_p (inches H_2O)	Tunnel Temperature (°F)	$\sqrt{\Delta_p}$
	6 po	7 po	8 po			
A- Centroid	3.00	3.50	4	0,066	72,10	
B - Centroid	3.00	3.50	4	0,065	71,01	
A-1	0.40	0.50	0.50	0,056	~~74,08~~ 74,08 MM	
A-2	1.50	1.75	2	0,063	72,68	
A-3	4.50	5.25	6	0,061	71,77	
A-4	5.60	6.5	7.5	0,060	70,05	
B-1	0.40	0.50	0.50	0,056	71,43	
B-2	1.50	1.75	2	0,061	71,67	
B-3	4.50	5.25	6	0,063	71,88	
B-4	5.60	6.5	7.5	0,057	71,85	DP
				AVERAGE		

$$v_s = K_p C_p (\sqrt{\Delta p})_{avg} \sqrt{\frac{(T_s)_{avg}}{P_s M_s}}$$

Where,
C_p = pitot tube coefficient, dimension less = 0.99 for standard pitot.
Δ_p = manometer reading (inches H_2O)
T_s = average absolute dilution tunnel temperature (°F + 460)
P_s = absolute dilution tunnel gas pressure or $P_{bar} + P_{qg}$
P_q = static pressure $\frac{\text{in. } H_2O}{\{\ 13.6\ \}}$
M_s = 28.56, wet molecular weight of stack gas (alternatively, it may be measured)
K_p = 85.49 pitot tube constant, (conversion factor for English units)

$_\Delta_p$avg. = average of the square roots of the velocity heads (Δ_p) measured at each traverse point.

POLYTESTS
TESTING THROUGH YOUR REALITY

CONTINUOUS ANALYZERS

Date: 2016-01-07 Manufacturer: Wood stock soapstone Model: 211

Project #: P1 20122 Run: 2 Tech: M.M. Reviewer: DP

Pre-Test (Adjust and Record)

	ZERO		SPAN		CAL. (Record Only)	
CO	0	0	2,961	2,971	1,001	1,00
Tolerance CO		+/- 0.02		+/- 0.15		+/- 0.05
CO_2	0	0	17,89	17,87	9,77	10,00
Tolerance CO2		+/- 0.02		+/- 0.5		+/- 0.5
O_2 informative CSA B415 calculated value	N.A	N.A	N.A	N.A	N.A	N.A
	Actual	Should Be	Actual	Should Be	Actual	Should Be

Post Test (Record Only)

	Zero	Span	Cal.	Zero Drift	Limit	Span Drift	Limit	Cal. Drift	Limit	OK?	Not OK*
CO	0,005	2,968	1,005	0,005	0.02	0,007	0.15	0,004	0.05	✓	
CO_2	0	17,84	9,74	0	0.02	0,05	0.5	0,03	0.5	✓	
O_2	N.A	N.A	N.A	N.A	na	N.A	na	N.A	na	N.A	N.A

POLYTESTS
TESTING THROUGH YOUR REALITY

TEST DATA LOG

Date: 2016-01-07 Manufacturer: Woodstock Soapstone Model: 211

Project #: pI 20122 Run: 2 Tech: M.M. Reviewer: DO

RAW DRY GAS METER READINGS

	System 1	System 2	System 2
Final (Liter)	342836,21	299666,60	809,13
Initial (Liter)	341821,79	298685,32	786,70
Flow meter (Liter)	N.A	N.A	N.A

AMBIENT CONDITIONS

	Before	After
Barometer (kPa):	102,8	102,6
Dry Bulb (F):	M.M. ~~20,8~~ 69,44	76,64
Humidity (%):	20,8	19,4

POLYTESTS
TESTING THROUGH YOUR REALITY

FUEL DATA

Date: 2016-01-07 Manufacturer: WOOD stock soapstone Model: 211

Project #: pI 20122 Run: 2 Tech: M.M. Reviewer: DP

FUEL DESCRIPTION:

Type of wood :

PRE-TEST LOAD

Piece Size	Weight	Meter Moisture Content (% dry)*				
2 x 4 x 15 in.	1.696 lbs.	23.8	22.9	23.1	22.8	22.9
2 x 4 x 15 in.	1.774 lbs.	23.6	23.6	23.4	23.7	23.8
2 x 4 x 15 in.	1.852 lbs.	23.0	23.6	23.3	23.2	23.0
2 x 4 x 6 in.	0.692 lbs.	22.8	22.9	23.6	23.3	22.9
2 x 4 x 6 in.	0.95 lbs.	22.9	23.8	23.3	23.7	23.7
2 x 4 x 6 in.	0.734 lbs.	23.6	23.9	23.0	22.8	22.6
2 x 4 x 6 in.	0.726 lbs.	23.5	22.8	23.1	23.0	23.0
2 x 4 x 6 in.	0.792 lbs.	23.6	23.3	23.5	23.7	23.5
2 x 4 x 6 in.	0.824 lbs.	23.9	23.3	23.0	23.2	23.6
2 x 4 x 6 in.	0.844 lbs.	23.8	23.9	23.6	22.9	22.8
2 x 4 x 6 in.	~~0.67~~ 0.674 lbs.	23.0	22.8	23.5	23.0	23.4
x x in.	lbs.					
x x in.	lbs.					
x x in.	lbs.					
x x in.	lbs.					
x x in.	lbs.					
x x in.	lbs.					
x x in.	lbs.					

TEST LOAD WEIGHT: 11.56 lbs

POLYTESTS
TESTING THROUGH YOUR REALITY

FUEL DATA

Date: 2016-01-07 Manufacturer: woodstock soapstone Model: 211

Project #: pI 20122 Run: 2 Tech: MM Reviewer: DP

FUEL DESCRIPTION:

Type of wood :

TEST LOAD

Piece Size	Weight		Meter Moisture Content (% dry)*				
1,5 x 3,5 x 16 in.	1 446	lbs.	20,9	20,6	20,9	21,1	21,6
1,5 x 3,5 x 16 in.	1 352	lbs.	20,6	20,1	20,3	19,9	20,9
1,5 x 3,5 x 16 in.	1 578	lbs.	20,1	20,9	21,1	20,5	20,1
1,5 x 3,5 x 16 in.	1 570	lbs.	20,5	20,8	20,1	20,9	20,6
3,5 x 3,5 x 16 in.	4 046	lbs.	20,6	20,9	19,8	19,9	20,1
3,5 x 3,5 x 16 in.	4 022	lbs.	20,6	20,1	19,9	20,6	20,9
1,5 x 3/4 x ~~4~~ 5 in.	0 114	lbs.			20,1		
1,5 x 3/4 x 5 in.	0,090	lbs.			21,6		
1,5 x 3/4 x 5 in.	0,086	lbs.			21,0		
1,5 x 3/4 x 5 in.	0,086	lbs.			22,1		
1,5 x 3/4 x 5 in.	0,106	lbs.			19,8		
1,5 x 3/4 x 5 in.	0,088	lbs.			19,9		
1,5 x 3/4 x 5 in.	0,088	lbs.			20,1		
1,5 x 3/4 x 5 in.	0,086	lbs.			20,6		
1,5 x 3/4 x 5 in.	0,090	lbs.			20,3		
1,5 x 3/4 x 5 in.	0,090	lbs.			20,5		
1,5 x 3/4 x 5 in.	0,086	lbs.			19,8		
1,5 x 3/4 x 5 in.	0,086	lbs.			19,5		
1,5 x 3/4 x 5 in.	0,088	lbs.			19,6		
1,5 x 3/4 x 5 in.	0,084	lbs.			19,3		
1,5 x 3/4 x 5 in.	0,088	lbs.			19,9		
1,5 x 3/4 x 5 in.	0,086	lbs.			20,1		
1,5 x 3/4 x 5 in.	0,086	lbs.			20,6		

TEST LOAD WEIGHT: _____ lbs

Min 20%:……..

Max 25%:_____

POLYTESTS
TESTING THROUGH YOUR REALITY

FUEL DATA

Date: 2016-07-07 Manufacturer: Woodstock Soapstone Model: 211

Project #: PI 20122 Run: 2 Tech: MM Reviewer: DP

FUEL DESCRIPTION:

Type of wood : Suitl

TEST LOAD

Piece Size	Weight				Meter Moisture Content (% dry)*		
1,5 x 3/4 x 5 in.	0,088	lbs.			19,9		
1,5 x 3/4 x 5 in.	0,096	lbs.			20,6		
1,5 x 3/4 x 5 in.	0,088	lbs.			20,4		
1,5 x 3/4 x 5 in.	0,086	lbs.			20,3		
1,5 x 3/4 x 5 in.	0,088	lbs.			20,1		
1,5 x 3/4 x 5 in.	0,086	lbs.			19,8		
1,5 x 3/4 x 5 in.	0,088	lbs.			19,7		
x x in.		lbs.					
x x in.		lbs.					
x x in.		lbs.					
x x in.		lbs.					
x x in.		lbs.					
x x in.		lbs.					
x x in.		lbs.					
x x in.		lbs.					
x x in.		lbs.					
x x in.		lbs.					
x x in.		lbs.					
x x in.		lbs.					
x x in.		lbs.					
x x in.		lbs.					
x x in.		lbs.					
x x in.		lbs.					

TEST LOAD WEIGHT: 16,17 lbs

Min 20%: 3,23

Max 25%: 4,04

POLYTESTS
TESTING THROUGH YOUR REALITY

DILUTION TUNNEL PARTICULATE SAMPLER DATA

Date: 2016-01-07 Manufacturer: wood stock soap stone Model: 211

Project #: pI 20122 Run: 2 Tech: MM Reviewer: DP

Rev.2 6/14/2021

Pre-test Weight Record		SYSTEM 1 – 1st hour				SYSTEM 1				
		Probe & Housing Number	Front Filter Number	Back Filter Number	gaskets	Probe & Housing Number	Front Filter Number	Back Filter Number	gaskets	Blanck
Date	Time	10	225	226	6	11	227	229	11	232
2016-01-06	17:00	94,6421	0,1264	0,1262	10,3151	93,7276	0,1242	0,1268	10,3103	0,1281
2016-01-07	8:00	94,6422	0,1264	0,1262	10,3153	93,7277	0,1243	0,1268	10,3104	0,1280

Post-test Weight Record		SYSTEM 1 – 1st hour				SYSTEM 1				
		Probe & Housing Number	Front Filter Number	Back Filter Number	gaskets	Probe & Housing Number	Front Filter Number	Back Filter Number	gaskets	Blanck
Date	Time	10	225	226	6	11	227	229	11	232
2016-01-07	15:30	94,6431	0,1336	0,1256	10,3188	93,7277	0,1249	0,1270	10,3119	0,1281
2016-01-11 ~~2016-01-08~~	14:30	94,6430	0,1328	0,1255	10,3180	93,7277	0,1246	0,1270	10,3115	0,1281
2016-01-14	8:00	94,6428	0,1328	0,1255	10,3179	93,7277	0,1246	0,1270	10,3111	0,1281
2016-01-14	16:00	94,6428	0,1328	0,1255	10,3179	93,7277	0,1246	0,1270	10,3111	0,1281

POLYTESTS
TESTING THROUGH YOUR REALITY

DILUTION TUNNEL PARTICULATE SAMPLER DATA

Date: 2016-01-07 Manufacturer: Woodstock Soapstone Model: 211

Project #: pI 20122 Run: 2 Tech: MM Reviewer: DP

		SYSTEM 2			
Pre-test Weight Record		Probe & Housing Number	Front Filter Number	Back Filter Number	gaskets
Date	Time	13	230	231	21
2016-01-06	17:00	95,1524	0,1251	0,1265	10,2246
MM 2016-01-~~07~~ 07	8:00	95,1525	0,1252	0,1265	10,2246

		SYSTEM 2			
Post-test Weight Record		Probe & Housing Number	Front Filter Number	Back Filter Number	gaskets
Date	Time	13	230	231	21
MM 2016-01-07 ~~2016-01-11~~ ~~2016-01-07~~	15:30	95,1529	0,1316	0,1258	10,2280
2016-01-11	14:30	95,1528	0,1316	0,1258	10,2270
2016-01-14	8:00	95,1528	0,1316	0,1258	10,2270
2016-01-14	16:00	95,1528	0,1316	0,1258	10,2270

Rev.2 6/14/2021

Paramètres

Tous les facteurs de corrections et autres paramètres qui peuvent être modifiés par l'utilisateur du fichier sont regroupés ici.

Code verrouillage:	WOO	

Description du test

Test standard	EPA	
Run #	3	
Date	11-01-2016	
Technicien	M.M	
Project #	PI-20122	

Description de l'unité

Manufacturier	Woodstock Soapstone	
Modèle	211	
Combustion system	Cat	
Appliance type	Hybrid woodstove	
Firebox volume	2,5	cu ft.
Appliance weight empty	600	lbs
Appliance weight full	600	lbs

Paramètres du test

Logging time	1	min
Manufacturer's rated heat output	na	BTU/h Donnée fournie par le manfacturier
Targeted category	1	
Targeted output	à définir	BTU/h
Cp steel	0,1	BTU/lb-°F

Échantillonnage

Blank sampling rate	0,20	cuft/min
Internal probe diameter	0,18	in.
Calibration Factor (DGM #1):	0,996	Dimensionless
Equipment number (DGM #1):	EM-178	
Calibration Factor (DGM #2):	0,990	Dimensionless
Equipment number (DGM #2):	EM-179	
Calibration Factor (DGM #3):	1,000	
Equipment number (DGM #3):	EM-070	Dimensionless

Tunnel

Targeted tunnel flow rate	184	scfm
Tunnel diameter	6	in.
Molecular weight	29	
Pitot tube type	Standard	
Pitot tube coefficient	0,99	Dimensionless

Project nu.	PI-20122
Date	11-01-2016
Technicien	M.M

Fuel data

Fuel type	Dimension	
Fuel specie	D. Fir	
HHV	19810,0	kJ/kg
%C	48,7	
%H	6,9	
%O	43,9	
%Ash	0,5	
HHV	8519,2	Btu/lb
LHV	7451,0	Btu/lb

Default Fuel Values

	D. Fir	Oak/Maple
HHV	19 810	19 887
%C	48,73	50
%H	6,87	6,6
%O	43,9	42,9
%Ash	0,5	0,5
HHV (Btu/lb)	8519	8552
LHV (Btu/lb)	7451	7480

	Start	End
Barometer (kPa):	100,5	101,3
Barometer (in.Hg):	29,677639	29,913879
Dry Bulb (F):	68,18	73,04
Humidity (%):	20,9	17,1
Air velocity (ft/min)	22	21

DGM #1	Final:	12171,728	cuft	Final:	344664,950	Liter
	Initial:	12107,282	cuft	Initial:	342840,050	Liter
DGM #2	Final:	10644,974	cuft	Final:	301432,080	Liter
	Initial:	10582,704	cuft	Initial:	299668,790	Liter
DGM room				Final:	852,110	cuft
				Initial:	810,450	cuft

Numéro de la ligne dans "Raw data" à partir duquel les données du VRAI test commencent: 197

Autres données à rentrer: dans preload data, load data, traverse et filter set weight

Project nu.	PI-20122
Date	11-01-2016
Technicien	M.M

Preload data sheet

Test Load Weight:

Lower	Ideal	Upper
15,75	17,50	19,25

Load Volume: 0,5237 cu. ft

Loading Density: 5,860 lbs./ft3

Number of Spaces: 19

Spacer weight (lbs):

Load Density (wet): 27,976 lbs./ft3

Dry Wood Density: 23,2243

Piece Size (in): Thick	Wide	x Length	Weight lbs	Meter Moisture Content Dry Uncorrected %					Ave. MC x Weight	Volume Cubic Inches
2	4	5,25	0,668	20,3		20			13,4602	42,00
2	4	5,25	0,668	20,4					13,6272	42,00
2	4	5,25	0,68	21					14,28	42,00
2	4	5,25	0,71	20,3					14,413	42,00
2	4	5,25	0,78	20,4					15,912	42,00
2	4	5,25	0,7	20,4					14,28	42,00
2	4	5,25	0,68	20					13,6	42,00
2	4	5,25	0,644	21					13,524	42,00
2	4	5,25	0,688	20,5					14,104	42,00
2	4	5,25	0,89	20,6					18,334	42,00
2	4	5,25	0,886	20,4					18,0744	42,00
2	4	5,25	0,816	20					16,32	42,00
2	4	5,25	0,826	21					17,346	42,00
2	4	5,25	0,78	20,4					15,912	42,00
2	4	5,25	0,83	20,6					17,098	42,00
2	4	5,25	0,95	20,5					19,475	42,00
2	4	5,25	0,806	20,13					16,22478	42,00
2	4	5,25	0,834	20,5					17,097	42,00
2	4	5,25	0,814	20,5					16,687	42,00
										0,00
										0,00
										0,00
										0,00
										0,00
										0,00
										0,00
									SUM MC:	299,76858

PreTest Load Weight: 14,65 lbs.

Dry Weight: 5,52 kg.

Average Moisture Content: %

Dry: 20,46

20,46

Must be 18-28

Wet: 16,99

must be 15,2-22

Project nu.	PI-20122
Date	11-01-2016
Technicien	M.M

FUEL LOAD DATA SHEET, CSA B415

Test Load Weight:

Lower	Ideal	Upper
15,8	17,5	19,3

* For boilers, a loading density factor of 10 lb/ft3 is applied

Load Volume: 0,55 cu. ft

Loading Density: 6,5 lbs./ft3

Number of Spaces: 24

Spacer weight: lbs

Load Density (wet): 29,4 lbs./ft3

Dry Wood Density: 24,4 lbs./ft3

Piece Size (in): Thick	Wide	›Length	Weight lbs	Meter Moisture Content Dry Uncorrected %					Ave. MC x Weight	Volume Cubic Inches	Ave. MC %
1,5	3,5	16	1,40	20,20	21,20	20,80	20,90	21,00	29,148	84,00	20,8
1,5	3,5	16	1,68	22,00	21,50	21,80	20,50	21,00	35,8848	84,00	21,4
1,5	3,5	16	1,70	21,90	21,80	20,90	21,30	21,20	36,414	84,00	21,4
1,5	3,5	16	1,49	20,50	21,20	21,00	20,80	20,60	31,0218	84,00	20,8
3,5	3,5	16	3,59	20,30	20,60	20,10	20,00	20,10	72,5898	196,00	20,2
3,5	3,5	16	3,83	19,90	20,10	20,80	20,50	20,30	77,8256	196,00	20,3
1,5	0,75	5	0,110			21,10			2,321	5,63	21,1
1,5	0,75	5	0,110			21,60			2,376	5,63	21,6
1,5	0,75	5	0,126			20,60			2,5956	5,63	20,6
1,5	0,75	5	0,114			20,30			2,3142	5,63	20,3
1,5	0,75	5	0,110			21,10			2,321	5,63	21,1
1,5	0,75	5	0,112			21,50			2,408	5,63	21,5
1,5	0,75	5	0,110			19,80			2,178	5,63	19,8
1,5	0,75	5	0,110			19,30			2,123	5,63	19,3
1,5	0,75	5	0,078			20,30			1,5834	5,63	20,3
1,5	0,75	5	0,108			20,60			2,2248	5,63	20,6
1,5	0,75	5	0,110			21,00			2,31	5,63	21,0
1,5	0,75	5	0,110			19,00			2,09	5,63	19,0
1,5	0,75	5	0,112			19,60			2,1952	5,63	19,6
1,5	0,75	5	0,112			19,30			2,1616	5,63	19,3
1,5	0,75	5	0,122			19,60			2,3912	5,63	19,6
1,5	0,75	5	0,106			19,80			2,0988	5,63	19,8
1,5	0,75	5	0,124			20			2,48	5,63	20,0
1,5	0,75	5	0,112			19,8			2,2176	5,63	19,8
1,5	0,75	5	0,082			19,9			1,6318	5,63	19,9
1,5	0,75	5	0,080			20,1			1,608	5,63	20,1
1,5	0,75	5	0,116			20,6			2,3896	5,63	20,6
1,5	0,75	5	0,136			20,8			2,8288	5,63	20,8
1,5	0,75	5	0,084			20,1			1,6884	5,63	20,1
1,5	0,75	5	0,136			21			2,856	5,63	21,0
								SUM MCx'	336,276		20,4 %

Test Load Weight: 16,32 lbs.

Dry Weight: 6,15 kg.

Average Moisture Content: %

Dry: 20,39 Dry(EPA) 20,39

Dry(B415 20,61

20,39 Must be 19-25

Wet: 16,94 must be 15,2-22

Coal Bed Range: 3,3 lbs. to 4,1 lbs.

TEST CHARGE:

Coal bed weight: 4 lbs.

Project nu.	PI-20122
Date	11-01-2016
Technicien	M.M

Tunnel Traverse Worksheet (for velocity calculations)

Static Pressure:		in. H20
Barometer:	29,900	in. Hg

Pour un tunnel de 12" et plus, prendre 6 lectures

	TUNNEL VELOCITY	TUNNEL TEMP	SQUARE ROOT
	In. wc	°F	
A center			0,0000
B center			0,0000
A1			0,0000
A2			0,0000
A3			0,0000
A4			0,0000
A5			0,0000
A6			0,0000
B1			0,0000
B2			0,0000
B3			0,0000
B4			0,0000
B5			0,0000
B6			0,0000
AVERAGE	#DIV/0!	#DIV/0!	0,0000

PITOT CONSTANT=
0,963

Pour un tunnel moins de 12", prendre 4 lectures

	TUNNEL VELOCITY	TUNNEL TEMP	SQUARE ROOT
	In. wc	°F	
A center	0,064	70,01	0,2530
B center	0,065	74,74	0,2550
A1	0,054	74,29	0,2324
A2	0,066	75,17	0,2569
A3	0,069	73,67	0,2627
A4	0,057	70,53	0,2387
B1	0,054	74,990	0,2324
B2	0,067	76,360	0,2588
B3	0,064	75,800	0,2530
B4	0,061	75,540	0,2470
AVERAGE	0,0621	74,1100	0,2490

Project nu.	PI-20122
Date	11-01-2016
Technicien	M.M

Filter set weight

	System 1 (g) 1st hour				System 1 (g)				System 2 (g)				Ambient blank (g)	Date	Heure
	probe	front	back	gasket	probe	front	back	gasket	probe	front	back	gasket	Filter		
Number	21	830	832	4	36	833	835	9	50	836	837	10	839		
Before (1)															
Before (2)															
Before (3)															
Before (4)															
Before (5)	108,7448	0,1279	0,1265	10,3538	107,7391	0,1252	0,1252	10,9351	107,6451	0,1250	0,1278	10,1355	0,1280	2016-01-07	17:00
Before (6)	108,7447	0,1278	0,1264	10,3539	107,7391	0,1251	0,1253	10,9350	107,6450	0,1251	0,1279	10,1356	0,1282	2016-01-11	09:00
After (1)	108,7451	0,1281	0,1255	10,3571	107,7395	0,1246	0,1252	10,9369	107,6451	0,1258	0,1275	10,1375	0,1282	2016-01-11	19:00
After (2)	108,7450	0,1279	0,1255	10,3548	107,7395	0,1244	0,1251	10,9362	107,6451	0,1254	0,1275	10,1367	0,1282	2016-01-19	08:00
After (3)	108,7450	0,1279	0,1255	10,3548	107,7395	0,1244	0,1251	10,9362	107,6451	0,1254	0,1275	10,1367	0,1282	2016-01-19	16:00
After (4)															
After (5)															
After (6)	108,7450	0,1279	0,1255	10,3548	107,7395	0,1244	0,1251	10,9362	107,6451	0,1254	0,1275	10,1367	0,1282	2016-01-19	16:00
Difference	0,0003	0,0001	-0,0009	0,0009	0,0004	-0,0007	-0,0002	0,0012	0,0001	0,0003	-0,0004	0,0011	0,0000		
Total (mg)		0,4				1,1				1,1			0		
Total ajusté (mg)		**0,40**				**1,10**				**1,10**					

"All components of the filter catch are dessicated and weighed before and after each test.
Small PM 2.5 catches may result in negative numbers, because, for example, a small piece of the filter might get stuck to the gasket.
Since all components are dessicated and weighed, we certify that the total weight is accurate. No chemicals or solvents are used to remove PM from the components.

Project nu.	PI-20122
Date	11-01-2016
Technicien	M.M

SFBA EPA EMISSION RESULTS

Test Duration: **354** min

PRESSURE FACTOR:	DGM 1	0,96473	
	DGM 2	0,97180	
	DGM 3	0,99585	
TEMPERATURE FACTORS	DGM 1	0,99001	
	DGM 2	0,98917	
	DGM 3	0,99333	
VOLUMES SAMPLED	DGM 1	61,314	SCft
	DGM 2	59,263	Scft
	DGM 3	41,210	SCft

TOTAL TUNNEL VOLUME : 65084

SAMPLE RATIOS

Sample Train 1:	1061,479
Sample Train 2:	1098,220

Paticulate concentration

Sample Train 1	**0,000018**	g/dscf
Sample Train 2	**0,000019**	g/dscf
Room	**0,000000**	g/dscf

TOTAL EMISSIONS

Sample Train 1	**1,17**	g
Sample Train 2	**1,21**	g

EMISSION RATES

Sample Train 1	**0,20**	g/hr
Sample Train 2	**0,20**	g/hr
1st hour emission rate	**0,42**	g/hr

	Train 1	Train 2
Cs	1,794E-05	1,85614E-05

RESULTS

Average emission rate: 0,2 g/hr

Burn Rate : 1,042 Dry kg/hr

BAROMETRIC PRESSURE

Average:	29,795759	in Hg
Start:	29,677639	in Hg
End:	29,913879	in Hg

DGM CONTROLLER VALUES

DGM 1	Final:	12171,728	Cuft
	Initial:	12107,282	Cuft
DGM 2	Final:	10644,974	Cuft
	Initial:	10582,704	Cuft
DGM #3	Final:	852,110	Cuft
	Initial:	810,450	Cuft

TEMPERATURES

DGM 1	533,327	°R
DGM 2	533,780	°R

CALIBRATION FACTORS

DGM 1	0,9961
DGM 2	0,9901
DGM #3	1,0000

TUNNEL FLOW RATE: 183,852 Dscfm

PARTICULATE CATCH

Total Sample Train 1:	1,10	mg
Total Sample Train 2:	1,10	mg
Total Sample Train 1 1st hour:	0,40	mg

DEVIATION: 1,70%

Data 2016-01-11 EPA PI-20122 run3

Manufacturer: oodstock Soapstone
Model: 211

Run: 3
Project #: PI-20122
Test Duration: 354 min

	HHV	LHV
Eff	79,47%	85,90%
Comb Eff	99,50%	99,50%
HT Eff	79,87%	86,33%
Output	16 037	kJ/h
Burn Rate	1,02	kg/h
Grams CO	5	g
Input	20 179	kJ/h
MC wet	16,94	

Note: In the "Input data", "Calc. % O_2", "Fuel Properties", and "Mass Balance" columns, [e], [d], [g], [a]. [b], [c], [h], [u], [w], [j], and [k] refer to their respective variables in Clauses 13.7.3

	Ultimate CO_2
$CO_{2\text{-ult}}$	19,64
	F_0
	1,060

Overall Heating Efficiency:	79,47%	
Combustion Efficiency:	99,50%	
Heat Transfer Efficiency:	79,87%	

Air Fuel Ratio (A/F)	
Dry Molecular Weight (M_d)	29,66
Dry Moles Exhaust Gas (N_f):	537,73
Air Fuel Ratio (A/F)	15,44

Heat Output:	15 213	Btu/h	16 037	kJ/h
Heat Input:	19 142	Btu/h	20 179	kJ/h
Burn Duration:	5,90	h		
Burn Rate:	2,25	lb/h	1,019	kg/h
Stack Temp:	255,0	Deg. F	123,9	Deg. C

POLYTESTS
TESTING THROUGH YOUR REALITY

Date: 2016-01-11 Manufacturer: Woodstock Soapstone Model: 211
Project #: PI 20122 Run: 3 Tech: MM Reviewer: AP

- 17 LBS kindling + preload START FIRE
- Δt 16,3 LBS close by pass
- Δt 16,3 LBS close DOOR
- Δt 9,5 LBS Brasser feux
- Δt 9,4 LBS close air inlet (3)
- Δt 8,5 LBS close air inlet (0)
- Δt 6,7 LBS Brasser laisser porte craquer
- Δt 4,4 LBS tapper un peu Braise (porte fermée)
- load a 1:00 4,00 LBS complétement
- laisse porte craquer 2 min
- Δt 3 min close air inlet (3)
- Δt 4:20 close air inlet (0)

TEST LOAD CONFIGURATION

POLYTESTS
TESTING THROUGH YOUR REALITY

Date:_____ Manufacturer:_____ Model:_____

Project #: _____ Run:_____ Tech:_____ Reviewer:_____

Rev.2 6/14/2021

Side view	Front view	Top view

POLYTESTS
TESTING THROUGH YOUR REALITY

Date:_____ Manufacturer:_____ Model:_____

Project #: _____ Run:_____ Tech:_____ Reviewer:_____

	ADDITION		SUBSTRACTION	
	ft3	Volume	ft3	Volume
V measure				
V ashlip				
%				
V usable				

Usable Firebox: _____

Test load weight: _____ Minimum: _____ Maximum: _____

Déviation: _____

Rev.2 6/14/2021

POLYTESTS
TESTING THROUGH YOUR REALITY

PRE / POST CHECKS

Date: 2016-01-11 Manufacturer: Woodstock Soapstone Model: 271

Project #: pI 20122 Run: 3 Tech: MA Reviewer: NP

Moisture Meter Calibration Check:

Equipment #	Time	12%	22%
EM-191	7:00	ok	ok

	Pre-Test	Post-Test
Facility Conditions:		
Air Velocity from less than 2 feet	22 (max50 Fpm)	21 (max50 Fpm)
Smoke Capture Check	ok	ok
Picture	4 sides ok	ok
Wood Heater Conditions:		
Date Wood Heater Stack Cleaned	2016-01-04	
Date Dilution Tunnel Cleaned	2016-01-04	
Induced Draft Check (max 0.005 H2O)	ok	
Traverse before ignition	ok	
Flow Rate 140 cfm ±10%		ok
Temperature System:		
Ambient (65°-90°F)	ok °F	
Wood Heater Surface (±125°F)	ok °F	
Proportional Checks:		
Thermocouple check	ok	
Pitot Clean	ok	
Pitot verification	ok	

Sampling Train ID Numbers:	Train 1st hour	Train 1	Train 2
Probe	21	36	50
Filter Front	830	833	836
Filter Back	832	835	837
Filter Thermocouple	11	11	12
Filter (<90°F)	ok	ok	ok

POLYTESTS
TESTING THROUGH YOUR REALITY

SAMPLING EQUIPMENT CHECK OUT

Date: 2016-01-11 Manufacturer: Wood Stock Soapstone Model: 211

Project #: pI 20122 Run: 3 Tech: MM Reviewer: NP

Leakage Checks Tunnel Samplers

	System 1st hour		System 1		System 2	
Unplugged Flow Rate = .25cfm	Pre-Test ASTM (-15) CSA B415 (-5)	Post-Test (max test)	Pre-Test ASTM (-15) CSA B415 (-5)	Post-Test (Max test)	Pre-Test ASTM (-15) CSA B415 (-5)	Post-Test (Max test)
Vacuum (inches Hg.)	-15	-15	-15	-15	-15	-15
Final 1minute DGM (Liter)	342839,25	344665,75	342839,50	344665,78	299668,06	301432,79
Initial 1minute DGM (Liter)	34283920	344665,69	342839,48	344665,77	299668,06	301432,78
Change © (Liter)	0,05	0,06	0,02	0,01	Ø	0,01
Allowable leakage .04 x Sample rate or 0.28Lpm CSA B415 (0.56)						
Check OK	ok	ok	ok	ok	ok	ok

Leakage Checks Flue Gas Sampler

Plugged Probe	Pre Test	Post Test
Vacuum (inches Hg.)	-5	-5
Rotometer Reading (mml/min.)	10	0
Flow Rate (lpm)	1.5	1.5
Allowable (.02 x Sample Rate)	30	30
Check OK	ok	ok

Leakage Checks Pitot

Plugged Probe	Pre Test 3 H2o static	Pre Test 0.4-0.5 H2o velocity	Post Test 3 H2o Static	Post Test 0.4-0.5 H2o velocity
Vacuum (inches Hg.)	3	.5	3	.5
Check OK (no change after 15 sec.)	ok	ok	ok	ok

POLYTESTS
TESTING THROUGH YOUR REALITY

PRE-TEST SCALE AUDIT

Date: 2016-01-11 Manufacturer: WOOD Stock soapstone Model: 211
Project #: pT 20122 Run: 3 Tech: MM Reviewer: DP

Scale Type	Audit		Measured Weight
	Equipment #	Weight	
Platform	EM-090	4,4 lbs, Class F	4,4 lbs
Wood	EM-096	4,4 lbs, Class F	4,4 lbs
Analytical	EM-128	100mg, Class S	100mg
Analytical	EM-129	200 g, Class S	200 g

LIMITS OF WEIGHT RANGES

ANALYTICAL SCALE: ..... 50%-150% of dry filter weight, ± 0.1 mg
PLATFORM SCALE..... 20%-80% of ideal test load weight, ± 0.1 lbs or 1%
WOOD SCALE ..... 20%-80% of ideal test load weight, ± 0.01 lbs or 1%

POLYTESTS
TESTING THROUGH YOUR REALITY

CONTINUOUS ANALYZERS

Date: 2016-01-11 Manufacturer: Woodstock soapstone Model: 211

Project #: PI 20122 Run: 3 Tech: MM Reviewer: [illegible]

FOR TUNNELS < 12 in

Barometric pressure (P_{bar}) 100,5 (KPa.) Static pressure (P_q) 0,28 (inches w.c.)
Inside diameter: Port A _____ Port B _____.
Tunnel cross sectional area: .1963Ft^2
Pitot tube type: Standard

Traverse Point	Position (inches)			Velocity Head Δ_p (inches H_2O)	Tunnel Temperature (°F)	$\sqrt{\Delta_p}$
	6 po	7 po	8 po			
A- Centroid	3.00	3.50	4	0,064	70,01	
B - Centroid	3.00	3.50	4	0,065	74,74	
A-1	0.40	0.50	0.50	0,054	74,29	
A-2	1.50	1.75	2	0,066	75,17	
A-3	4.50	5.25	6	0,069	73,67	
A-4	5.60	6.5	7.5	0,057	70,53	
B-1	0.40	0.50	0.50	0,054	74,99	
B-2	1.50	1.75	2	0,067	76,36	
B-3	4.50	5.25	6	0,064	75,80	
B-4	5.60	6.5	7.5	0,061	75,54	
				AVERAGE		

$$v_s = K_p C_p (\sqrt{\Delta p})_{avg} \sqrt{\frac{(T_s)_{avg}}{P_s M_s}}$$

Where,
C_p = pitot tube coefficient, dimension less = 0.99 for standard pitot.
Δ_p = manometer reading (inches H_2O)
T_s = average absolute dilution tunnel temperature (°F + 460)
P_s = absolute dilution tunnel gas pressure or $P_{bar} + P_{qg}$
P_q = static pressure $\frac{\text{in. } H_2O}{\{\ 13.6\ \}}$
M_s = 28.56, wet molecular weight of stack gas (alternatively, it may be measured)
K_p = 85.49 pitot tube constant, (conversion factor for English units)

$_\Delta_p$avg. = average of the square roots of the velocity heads (Δ_p) measured at each traverse point.

POLYTESTS
TESTING THROUGH YOUR REALITY

CONTINUOUS ANALYZERS

Date: 2016-01-11 Manufacturer: WOOD stock soapstone Model: 211
Project #: pI 20122 Run: 3 Tech: M M Reviewer: NP

Pre-Test (Adjust and Record)

	ZERO		SPAN		CAL. (Record Only)	
CO	0	0	2,953	2,921	0,993	1,00
Tolerance CO		+/- 0.02		+/- 0.15		+/- 0.05
CO_2	0	0	12,89	12,87	9,73	10.00
Tolerance CO2		+/- 0.02		+/- 0.5		+/- 0.5
O_2 informative CSA B415 calculated value	N.D	N.D	N.D	N.D	N.D	N.D
	Actual	Should Be	Actual	Should Be	Actual	Should Be

Post Test (Record Only)

	Zero	Span	Cal.	Zero Drift	Limit	Span Drift	Limit	Cal. Drift	Limit	OK?	Not OK*
CO	0,002	2,955	1,000	0.002	0.02	0.002	0.15	0.007	0.05	✓	
CO_2	0	12,80	9,70	0	0.02	0.09	0.5	0.03	0.5	✓	
O_2	N.D	N.D	N.D	N.D	na	N.D	na	N.D	na	N.D	N.D

POLYTESTS
TESTING THROUGH YOUR REALITY

TEST DATA LOG

Date: 2016 04 11 Manufacturer: Woodstock Soapstone Model: 211

Project #: pt 20122 Run: 3 Tech: MM Reviewer: AP

RAW DRY GAS METER READINGS

	System 1	System 2	System 2
Final (Liter)	344664,95	301432,08	852,11
Initial (Liter)	342840,05	299668,79	810,45
Flow meter (Liter)	NA	NA	NA

AMBIENT CONDITIONS

	Before	After
Barometer (kPa):	100,5	101,3
Dry Bulb (F):	68,18	73,04
Humidity (%):	20,9	17,1

POLYTESTS
TESTING THROUGH YOUR REALITY

FUEL DATA

Date: 26 oct 11 Manufacturer: woodstock soapstone Model: 211

Project #: pt 20122 Run: 3 Tech: M M Reviewer: JP

FUEL DESCRIPTION:

Type of wood :

PRE-TEST LOAD

Piece Size	Weight		Meter Moisture Content (% dry)*				
2 x 4 x 5,25 in.	0,668	lbs.	20,1	20,6	20,3	20,1	20,6
2 x 4 x 5,25 in.	0,668	lbs.	20,4	20,7	20,3	20,2	19,9
2 x 4 x 5,25 in.	0,68	lbs.	21,1	21,0	20,6	20,8	20,7
2 x 4 x 5,25 in.	0,71	lbs.	20,0	21,0	20,3	20,2	20,0
2 x 4 x 5,25 in.	0,78	lbs.	21,0	20,6	20,0	19,9	19,8
2 x 4 x 5,25 in.	0,70	lbs.	19,6	20,1	20,0	20,0	20,0
2 x 4 x 5,25 in.	0,68	lbs.	20,1	20,3	20,0	20,7	20,7
2 x 4 x 5,25 in.	0,644	lbs.	20,6	20,9	20,8	20,9	20,3
2 x 4 x 5,25 in.	0,688	lbs.	20,3	20,4	20,3	20,0	20,8
2 x 4 x 6,5 in.	0,89	lbs.	20,2	20,7	20,7	20,8	20,4
2 x 4 x 6,5 in.	0,886	lbs.	20,6	21,6	20,6	20,7	20,3
2 x 4 x 6,5 in.	0,816	lbs.	20,3	21,1	20,3	20,3	20,0
2 x 4 x 6,5 in.	0,826	lbs.	21,0	20,8	21,3	20,9	20,5
2 x 4 x 6,5 in.	0,78	lbs.	20,3	20,3	20,8	21,0	21,5
2 x 4 x 6,5 in.	0,83	lbs.	20,2	20,6	20,4	20,8	20,9
2 x 4 x 6,5 in.	0,95	lbs.	20,0	20,3	20,2	21,0	20,9
2 x 4 x 6,5 in.	0,806	lbs.	19,8	20,3	20,6	20,3	20,4
2 x 4 x 6,5 in.	0,834	lbs.	19,8	20,0	20,6	21,1	20,8
2 x 4 x 6,5 in.	0,814	lbs	19,9	20,3	20,3	20,6	20,3

TEST LOAD WEIGHT: 14,65 lbs

POLYTESTS
TESTING THROUGH YOUR REALITY

FUEL DATA

Date: 2016-01-11 Manufacturer: wood stock soapstone Model: 211

Project #: PT 20122 Run: 3 Tech: MS Reviewer: TP

FUEL DESCRIPTION:

Type of wood :

TEST LOAD

Piece Size	Weight	Meter Moisture Content (% dry)*				
1,5 x 3,5 x 16 in.	1,40 lbs.	20,2	21,2	20,8	20,9	21,0
1,5 x 3,5 x 16 in.	1,68 lbs.	22	21,5	21,8	20,5	21,0
1,5 x 3,5 x 16 in.	1,70 lbs.	21,9	21,8	20,9	21,3	21,2
1,5 x 3,5 x 16 in.	1,49 lbs.	20,5	21,2	21,0	20,8	20,6
3,5 x 3,5 x 16 in.	3,59 lbs.	20,3	20,6	20,1	20,0	20,1
3,5 x 3,5 x 16 in.	3,83 lbs.	19,9	20,1	20,8	20,5	20,3
1,5 x 0,75 x 5 in.	0,11 lbs.			21,1		
1,5 x 0,75 x 5 in.	0,11 lbs.			21,6		
1,5 x 0,75 x 5 in.	0,126 lbs.			20,6		
1,5 x 0,75 x 5 in.	0,114 lbs.			20,3		
1,5 x 0,75 x 5 in.	0,11 lbs.			21,1		
1,5 x 0,75 x 5 in.	0,112 lbs.			21,5		
1,5 x 0,75 x 5 in.	0,11 lbs.			19,8		
1,5 x 0,75 x 5 in.	0,11 lbs.			19,3		
1,5 x 0,75 x 5 in.	0,078 lbs.			20,3		
1,5 x 0,75 x 5 in.	0,108 lbs.			20,6		
1,5 x 0,75 x 5 in.	0,11 lbs.			21,0		
1,5 x 0,75 x 5 in.	0,11 lbs.			19,0		
1,5 x 0,75 x 5 in.	0,112 lbs.			19,6		
1,5 x 0,75 x 5 in.	0,112 lbs.			19,3		
1,5 x 0,75 x 5 in.	0,122 lbs.			19,6		
1,5 x 0,75 x 5 in.	0,106 lbs.			19,8		
1,5 x 0,75 x 5 in.	0,124 lbs.			20,0		

TEST LOAD WEIGHT: 16,32 lbs

Min 20%: 3,26

Max 25%: 4,08

Rev.2 6/14/2021

POLYTESTS
TESTING THROUGH YOUR REALITY

FUEL DATA

Date: 2016-01-11 Manufacturer: woodstock soapstone Model: 211

Project #: PL 20122 Run: 3 Tech: MM Reviewer: DP

FUEL DESCRIPTION: Suite

Type of wood :

TEST LOAD

Piece Size	Weight	Meter Moisture Content (% dry)*				
1,5 x 0,75 x 5 in.	0,112 lbs.			19,8		
1,5 x 0,75 x 5 in.	0,082 lbs.			19,9		
1,5 x 0,75 x 5 in.	0,080 lbs.			20,1		
1,5 x 0,75 x 5 in.	0,116 lbs.			20,6		
1,5 x 0,75 x 5 in.	0,136 lbs.			20,8		
1,5 x 0,75 x 5 in.	0,084 lbs.			20,1		
1,5 x 0,75 x 5 in.	0,106 lbs.			21,0		
~~1,5 x 0,75~~ x in.	lbs.					
~~1,5 x 0,75~~ x in.	lbs.					
x x in.	lbs.					
x x in.	lbs.					
x x in.	lbs.					
x x in.	lbs.					
x x in.	lbs.					
x x in.	lbs.					
x x in.	lbs.					
x x in.	lbs.					
x x in.	lbs.					
x x in.	lbs.					
x x in.	lbs.					
x x in.	lbs.					
x x in.	lbs.					
x x in.	lbs.					

TEST LOAD WEIGHT: 16,32 lbs

Min 20%: 3,26

Max 25%: 4,08

POLYTESTS
TESTING THROUGH YOUR REALITY

DILUTION TUNNEL PARTICULATE SAMPLER DATA

Date: 2016-01-07 Manufacturer: Woodstock soapstone Model: 211

Project #: pI 20122 Run: 3 Tech: MM Reviewer: DP

Rev.2 6/14/2021

Pre-test Weight Record		SYSTEM 1 – 1st hour				SYSTEM 1				
		Probe & Housing Number	Front Filter Number	Back Filter Number	gaskets	Probe & Housing Number	Front Filter Number	Back Filter Number	gaskets	Blanck
Date	Time	21	830	832	4	36	833	835	9	839
2016-01-03	17:00	108,7448	0,1279	0,1265	10,3538	107,7391	0,1252	0,1252	10,9351	0,1280
2016-01-11	9:00	108,7447	0,1278	0,1264	10,3539	107,7391	0,1251	0,1253	10,9350	0,1282

Post-test Weight Record		SYSTEM 1 – 1st hour				SYSTEM 1				
		Probe & Housing Number	Front Filter Number	Back Filter Number	gaskets	Probe & Housing Number	Front Filter Number	Back Filter Number	gaskets	Blanck
Date	Time	21	830	832	4	36	833	835	9	839
2016-01-11	19:00	108,7451	0,1281	0,1255	10,3571	107,7395	0,1246	0,1252	10,9369	0,1283
2016-01-19	8:00	108,7450	0,1279	0,1255	10,3548	107,7395	0,1244	0,1251	10,9362	0,1282
2016-01-19	16:00	108,7450	0,1279	0,1255	10,3548	107,7395	0,1244	0,1251	10,9361	0,1282

POLYTESTS
TESTING THROUGH YOUR REALITY

DILUTION TUNNEL PARTICULATE SAMPLER DATA

Date: 2016-01-07 Manufacturer: Woodstock Soapstone Model: 211

Project #: PI 20122 Run: 3 Tech: MM Reviewer: DP

Pre-test Weight Record		SYSTEM 2			
		Probe & Housing Number	Front Filter Number	Back Filter Number	gaskets
Date	Time	50	836	837	10
2016-01-07	17:00	107,6451	0,1250	0,1278	10,1355
2016-01-11	9:00	107,6450	0,1251	0,1279	10,1356

Post-test Weight Record		SYSTEM 2			
		Probe & Housing Number	Front Filter Number	Back Filter Number	gaskets
Date	Time	50	836	837	10
2016-01-11	19:00	107,6451	0,1258	0,1275	10,1375
2016-01-19	8:00	107,6451	0,1254	0,1275	10,1367
2016-01-19	16:00	107,6451	0,1254	0,1275	10,1366

Rev.2 6/14/2021

Paramètres

Tous les facteurs de corrections et autres paramètres qui peuvent être modifiés par l'utilisateur du fichier sont regroupés ici.

Code verrouillage:	WOO	

Description du test

Test standard	EPA	
Run #	4	
Date	12-11-2016	
Technicien	M.M	
Project #	PI-20122	

Description de l'unité

Manufacturier	Woodstock Soapstone	
Modèle	211	
Combustion system	Cat	
Appliance type	Hybrid woodstove	
Firebox volume	2,5	cu ft.
Appliance weight empty	600	lbs
Appliance weight full	600	lbs

Paramètres du test

Logging time	1	min
Manufacturer's rated heat output	na	BTU/h Donnée fournie par le manfacturier
Targeted category	1	
Targeted output	à définir	BTU/h
Cp steel	0,1	BTU/lb-°F

Échantillonnage

Blank sampling rate	0,20	cuft/min
Internal probe diameter	0,18	in.
Calibration Factor (DGM #1):	0,996	Dimensionless
Equipment number (DGM #1):	EM-178	
Calibration Factor (DGM #2):	0,990	Dimensionless
Equipment number (DGM #2):	EM-179	
Calibration Factor (DGM #3):	1,000	
Equipment number (DGM #3):	EM-070	Dimensionless

Tunnel

Targeted tunnel flow rate	160	scfm
Tunnel diameter	6	in.
Molecular weight	29	
Pitot tube type	Standard	
Pitot tube coefficient	0,99	Dimensionless

Project nu.	PI-20122
Date	12-11-2016
Technicien	M.M

Fuel data

Fuel type	Dimension	
Fuel specie	D. Fir	
HHV	19810,0	kJ/kg
%C	48,7	
%H	6,9	
%O	43,9	
%Ash	0,5	
HHV	8519,2	Btu/lb
LHV	7451,0	Btu/lb

Default Fuel Values

	D. Fir	Oak/Maple
HHV	19 810	19 887
%C	48,73	50
%H	6,87	6,6
%O	43,9	42,9
%Ash	0,5	0,5
HHV (Btu/lb)	8519	8552
LHV (Btu/lb)	7451	7480

	Start	End
Barometer (kPa):	101,5	101,4
Barometer (in.Hg):	29,972939	29,943409
Dry Bulb (F):	72,5	74,5
Humidity (%):	18,3	21
Air velocity (ft/min)	23	22

DGM #1	Final:	12245,462	cuft	Final:	346752,850	Liter
	Initial:	12171,786	cuft	Initial:	344666,590	Liter
DGM #2	Final:	10715,907	cuft	Final:	303440,700	Liter
	Initial:	10645,049	cuft	Initial:	301434,200	Liter
DGM room				Final:	909,610	cuft
				Initial:	852,150	cuft

Numéro de la ligne dans "Raw data" à partir duquel les données du VRAI test commencent: 197

Autres données à rentrer: dans preload data, load data, traverse et filter set weight

Project nu.	PI-20122
Date	12-11-2016
Technicien	M.M

Preload data sheet

Test Load Weight:

Lower	Ideal	Upper
15,75	17,50	19,25

Load Volume: 0,0000 cu. ft

Loading Density: 5,872 lbs./ft3

Number of Spaces:

Spacer weight (lbs):

Load Density (wet): #DIV/0! lbs./ft3

Dry Wood Density: #DIV/0!

Piece Size (in): Thick	Wide	x Length	Weight lbs	Meter Moisture Content Dry Uncorrected %					Ave. MC x Weight	Volume Cubic Inches
										0,00
										0,00
										0,00
										0,00
										0,00
										0,00
										0,00
										0,00
										0,00
										0,00
										0,00
										0,00
										0,00
										0,00
										0,00
			14,68						#DIV/0!	0,00
								SUM MC:	#DIV/0!	

PreTest Load Weight: 14,68 lbs.

Dry Weight: #DIV/0! kg.

Average Moisture Content: %

Dry: #DIV/0!

Must be 18-28

Wet: #DIV/0!
must be 15,2-22

Project nu.	PI-20122
Date	12-11-2016
Technicien	M.M

FUEL LOAD DATA SHEET, CSA B415

Test Load Weight:

Lower	Ideal	Upper
15,8	17,5	19,3

* For boilers, a loading density factor of 10 lb/ft3 is applied

Load Volume: 0,55 cu. ft

Loading Density: 6,8 lbs./ft3

Number of Spaces: 24

Spacer weight: lbs

Load Density (wet): 30,5 lbs./ft3

Dry Wood Density: 25,3 lbs./ft3

Piece Size (in): Thick	Wide	›Length	Weight lbs	Meter Moisture Content Dry Uncorrected %					Ave. MC x Weight	Volume Cubic Inches	Ave. MC %
1,5	3,5	16	1,73	22,00	21,60	21,90	21,80	21,00	37,4718	84,00	21,7
1,5	3,5	16	1,47	21,10	22,10	21,90	21,00	20,80	31,4286	84,00	21,4
1,5	3,5	16	1,38	21,00	21,80	21,60	21,00	20,60	29,256	84,00	21,2
1,5	3,5	16	1,64	21,30	21,70	21,50	20,80	20,90	34,8336	84,00	21,2
3,5	3,5	16	4,05	20,70	21,60	21,00	20,90	20,80	85,05	196,00	21,0
3,5	3,5	16	4,22	20,00	20,40	20,60	20,30	20,20	85,666	196,00	20,3
1,5	0,75	5	0,10			20,60			1,9776	5,63	20,6
1,5	0,75	5	0,10			20,90			2,0482	5,63	20,9
1,5	0,75	5	0,11			21,10			2,321	5,63	21,1
1,5	0,75	5	0,11			21,60			2,2896	5,63	21,6
1,5	0,75	5	0,10			21,30			2,0448	5,63	21,3
1,5	0,75	5	0,10			20,80			2,1632	5,63	20,8
1,5	0,75	5	0,10			20,60			1,9776	5,63	20,6
1,5	0,75	5	0,09			20,40			1,9176	5,63	20,4
1,5	0,75	5	0,10			20,20			2,02	5,63	20,2
1,5	0,75	5	0,10			20,80			1,9968	5,63	20,8
1,5	0,75	5	0,10			21,00			2,1	5,63	21,0
1,5	0,75	5	0,10			21,80			2,1364	5,63	21,8
1,5	0,75	5	0,10			21,20			2,0776	5,63	21,2
1,5	0,75	5	0,108			21,00			2,268	5,63	21,0
1,5	0,75	5	0,104			20,90			2,1736	5,63	20,9
1,5	0,75	5	0,108			20,80			2,2464	5,63	20,8
1,5	0,75	5	0,112			20,6			2,3072	5,63	20,6
1,5	0,75	5	0,1			21			2,1	5,63	21,0
1,5	0,75	5	0,098			20,8			2,0384	5,63	20,8
1,5	0,75	5	0,098			21,1			2,0678	5,63	21,1
1,5	0,75	5	0,098			20,9			2,0482	5,63	20,9
1,5	0,75	5	0,11			19,9			2,189	5,63	19,9
1,5	0,75	5	0,114			19,8			2,2572	5,63	19,8
1,5	0,75	5	0,098			19,6			1,9208	5,63	19,6
								SUM MCx'	354,393		20,8 %

Test Load Weight: 16,93 lbs.

Dry Weight: 6,35 kg.

Average Moisture Content: %

Dry: 20,85 Dry(EPA) 20,85

Dry(B415 20,93

20,85

Must be 19-25

Wet: 17,25

must be 15,2-22

Coal Bed Range: 3,4 lbs. to 4,2 lbs.

TEST CHARGE:

Coal bed weight: 4,2 lbs.

Project nu.	PI-20122
Date	12-11-2016
Technicien	M.M

Tunnel Traverse Worksheet (for velocity calculations)

Static Pressure:	0,27	in. H20
Barometer:	29,900	in. Hg

Pour un tunnel de 12" et plus, prendre 6 lectures

	TUNNEL VELOCITY	TUNNEL TEMP	SQUARE ROOT
	In. wc	°F	
A center			0,0000
B center			0,0000
A1			0,0000
A2			0,0000
A3			0,0000
A4			0,0000
A5			0,0000
A6			0,0000
B1			0,0000
B2			0,0000
B3			0,0000
B4			0,0000
B5			0,0000
B6			0,0000
AVERAGE	#DIV/0!	#DIV/0!	0,0000

PITOT CONSTANT=
0,943

Pour un tunnel moins de 12", prendre 4 lectures

	TUNNEL VELOCITY	TUNNEL TEMP	SQUARE ROOT
	In. wc	°F	
A center	0,065	80,13	0,2550
B center	0,064	75,98	0,2530
A1	0,055	79,61	0,2345
A2	0,063	78	0,2510
A3	0,068	76,25	0,2608
A4	0,056	76	0,2366
B1	0,055	75,500	0,2345
B2	0,061	75,410	0,2470
B3	0,065	75,010	0,2550
B4	0,056	74,940	0,2366
AVERAGE	0,0608	76,6830	0,2464

Project nu.	PI-20122
Date	12-11-2016
Technicien	M.M

Filter set weight

	System 1 (g) 1st hour				System 1 (g)				System 2 (g)				Ambient blank (g)	Date	Heure
	probe	front	back	gasket	probe	front	back	gasket	probe	front	back	gasket	Filter		
Number	18	800	801	1	34	809	810	5	35	831	834	22	838		
Before (1)															
Before (2)															
Before (3)															
Before (4)															
Before (5)	108,9503	0,1261	0,1265	11,0501	110,1020	0,1270	0,1261	10,4444	109,2835	0,1261	0,1277	10,0030	0,1278	2016-01-11	17:00
Before (6)	108,9504	0,1262	0,1266	11,0502	110,1021	0,1271	0,1261	10,4445	109,2836	0,1263	0,1278	10,0030	0,1279	2016-01-12	08:30
After (1)	108,9514	0,1263	0,1264	11,0519	110,1028	0,1275	0,1265	10,4464	109,2841	0,1272	0,1283	10,0045	0,1283	2016-01-12	20:00
After (2)	108,9505	0,1261	0,1263	11,0508	110,1021	0,1272	0,1262	10,4452	109,2837	0,1268	0,1280	10,0033	0,1281	2016-01-19	08:15
After (3)	108,9505	0,1261	0,1263	11,0507	110,1021	0,1272	0,1262	10,4452	109,2837	0,1268	0,1280	10,0032	0,1280	2016-01-19	16:15
After (4)															
After (5)															
After (6)	108,9505	0,1261	0,1263	11,0507	110,1021	0,1272	0,1262	10,4452	109,2837	0,1268	0,1280	10,0032	0,1280	2016-01-19	16:15
Difference	0,0001	-0,0001	-0,0003	0,0005	0,0000	0,0001	0,0001	0,0007	0,0001	0,0005	0,0002	0,0002	0,0001		
Total (mg)		0,2				1,1				1			0,1		
Total ajusté (mg)		**0,10**				**1,00**				**0,90**					

"All components of the filter catch are dessicated and weighed before and after each test.
Small PM 2.5 catches may result in negative numbers, because, for example, a small piece of the filter might get stuck to the gasket.
Since all components are dessicated and weighed, we certify that the total weight is accurate. No chemicals or solvents are used to remove PM from the components.

Project nu.	PI-20122
Date	12-11-2016
Technicien	

SFBA EPA EMISSION RESULTS

Test Duration: **399** min

PRESSURE FACTOR:	DGM 1	0,97269	
	DGM 2	0,97920	
	DGM 3	1,00128	
TEMPERATURE FACTORS	DGM 1	0,98829	
	DGM 2	0,98686	
	DGM 3	0,98859	
VOLUMES SAMPLED	DGM 1	70,551	SCft
	DGM 2	67,792	Scft
	DGM 3	56,877	SCft

TOTAL TUNNEL VOLUME : 70584

SAMPLE RATIOS

Sample Train 1:	1000,464
Sample Train 2:	1041,180

Paticulate concentration

Sample Train 1	**0,000016**	g/dscf
Sample Train 2	**0,000015**	g/dscf
Room	**0,000002**	g/dscf

TOTAL EMISSIONS

Sample Train 1	**0,98**	g
Sample Train 2	**0,92**	g

EMISSION RATES

Sample Train 1	**0,15**	g/hr
Sample Train 2	**0,14**	g/hr
1st hour emission rate	**0,20**	g/hr

	Train 1	Train 2
Cs	1,559E-05	1,4751E-05

RESULTS

Average emission rate: 0,1 g/hr

Burn Rate : 0,956 Dry kg/hr

BAROMETRIC PRESSURE

Average:	29,958174	in Hg
Start:	29,972939	in Hg
End:	29,943409	in Hg

DGM CONTROLLER VALUES

DGM 1	Final:	12245,462	Cuft
	Initial:	12171,786	Cuft
DGM 2	Final:	10715,907	Cuft
	Initial:	10645,049	Cuft
DGM #3	Final:	909,610	Cuft
	Initial:	852,150	Cuft

TEMPERATURES

DGM 1	534,256	°R
DGM 2	535,029	°R

CALIBRATION FACTORS

DGM 1	0,9961
DGM 2	0,9901
DGM #3	1,0000

TUNNEL FLOW RATE: 176,902 Dscfm

PARTICULATE CATCH

Total Sample Train 1:	1,10	mg
Total Sample Train 2:	1,00	mg
Total Sample Train 1 1st hour:	0,20	mg

DEVIATION: 3,13%

Data 2016-01-12 EPA PI-20122 run4

Manufacturer: Woodstock Soapstone
Model: 211

Run: 4
Project #: PI-20122
Test Duration: 399 min

	HHV	LHV
Eff	80,32%	86,81%
Comb Eff	99,50%	99,50%
HT Eff	80,72%	87,24%
Output	15 208	kJ/h
Burn Rate	0,96	kg/h
Grams CO	5	g
Input	18 935	kJ/h
MC wet	17,25	

Note: In the “Input data”, "Calc. % O_2", "Fuel Properties", and “Mass Balance” columns, [e], [d], [g], [a]. [b], [c], [h], [u], [w], [j], and [k] refer to their respective variables in Clauses 13.7.3

Ultimate CO_2
$CO_{2\text{-ult}}$ 19,64
F_0
1,060

Overall Heating Efficiency:	80,32%	Air Fuel Ratio (A/F)
Combustion Efficiency:	99,50%	Dry Molecular Weight (M_d) 29,62
Heat Transfer Efficiency:	80,72%	Dry Moles Exhaust Gas (N_r): 565,11
		Air Fuel Ratio (A/F) 16,23

Heat Output:	14 426	Btu/h	15 208	kJ/h
Heat Input:	17 962	Btu/h	18 935	kJ/h
Burn Duration:	6,65	h		
Burn Rate:	2,11	lb/h	0,956	kg/h
Stack Temp:	238,0	Deg. F	114,4	Deg. C

POLYTESTS
TESTING THROUGH YOUR REALITY

Date: 2016 01 12 Manufacturer: Woodstock Soapstone Model: 211

Project #: ~~PT 10 111~~ MM. PT 20122 Run: 4 Tech: MM Reviewer: DP

- 15,06 LBS kindling and preload start fire
- At 14,90 close by pass
- At 14,80 close door
- At 13 LBS close air inlet (3,25)
- At 10 LBS Brasser feux (ramener morceaux vers milieu)
- At 8,3 LBS Brasser feu and close air inlet (0)
- laisse porte clipper va par (Non Fermée)
- At 4,2 LBS insert load 1:13
- ouvre pas air inlet Fermer porte et by pass immediatement

TEST LOAD CONFIGURATION

POLYTESTS
TESTING THROUGH YOUR REALITY

PRE / POST CHECKS

Date: 2016-01-12 Manufacturer: Woodstock Soapstone Model: 211

Project #: pI 20122 Run: 4 Tech: [illegible] Reviewer: DP

Moisture Meter Calibration Check:

Equipment #	Time	12%	22%
EM-191	7:00	ok	ok

Pre-Test	Post-Test

Facility Conditions:

	Pre-Test	Post-Test
Air Velocity from less than 2 feet	23 (max50 Fpm)	22 (max50 Fpm)
Smoke Capture Check	ok	ok
Picture (4 sides)	ok	ok

Wood Heater Conditions:

Date Wood Heater Stack Cleaned	2016-01-04
Date Dilution Tunnel Cleaned	2016-01-04
Induced Draft Check (max 0.005 H2O)	ok
Traverse before ignition	ok
Flow Rate 140 cfm ±10%	ok

Temperature System:

Ambient (65°-90°F)	ok	°F
Wood Heater Surface (±125°F)	ok	°F

Proportional Checks:

Thermocouple check	ok
Pitot Clean	ok
Pitot verification	ok

Sampling Train ID Numbers:

	Train 1st hour	Train 1	Train 2
Probe	18	34	35
Filter Front	800 ~~800~~	809	831
Filter Back	801	810	834
Filter Thermocouple	11	11	12
Filter (<90°F)	ok	ok	ok

POLYTESTS
TESTING THROUGH YOUR REALITY

SAMPLING EQUIPMENT CHECK OUT

Date: 2016-01-12 Manufacturer: Woodstock Soapstone Model: 211

Project #: pt 20122 Run: 4 Tech: MN Reviewer: DP

Leakage Checks Tunnel Samplers

	System 1st hour		System 1		System 2	
Unplugged Flow Rate = .25cfm	Pre-Test ASTM (-15) CSA B415 (-5)	Post-Test (max test)	Pre-Test ASTM (-15) CSA B415 (-5)	Post-Test (Max test)	Pre-Test ASTM (-15) CSA B415 (-5)	Post-Test (Max test)
Vacuum (inches Hg.)	-15	-15	-15	-15	-15	-15
Final 1minute DGM (Liter)	344665,96	346753,62	344666,06	346753,69	301433,61	303441,56
Initial 1minute DGM (Liter)	344665,96	346753,60	344666,05	346753,68	301433,61	303441,55
Change © (Liter)	0	0,01	0,01	0,01	0	0,01
Allowable leakage .04 x Sample rate or 0.28Lpm CSA B415 (0.56)						
Check OK	ok	ok	ok	ok	ok	ok

Leakage Checks Flue Gas Sampler

Plugged Probe	Pre Test	Post Test
Vacuum (inches Hg.)	-5	-5
Rotometer Reading (mml/min.)	5	5
Flow Rate (lpm)	1.5	1.5
Allowable (.02 x Sample Rate)	30	30
Check OK	ok	ok

Leakage Checks Pitot

Plugged Probe	Pre Test 3 H2o static	Pre Test 0.4-0.5 H2o velocity	Post Test 3 H2o Static	Post Test 0.4-0.5 H2o velocity
Vacuum (inches Hg.)	3	.4	3	.4
Check OK (no change after 15 sec.)	ok	ok	ok	ok

POLYTESTS
TESTING THROUGH YOUR REALITY

PRE-TEST SCALE AUDIT

Date: 2016 01 12 Manufacturer: Woodstock Soapstone Model: 2M
Project #: PI 20122 Run: 4 Tech: MM Reviewer: NP

Scale Type	Audit		Measured Weight
	Equipment #	Weight	
Platform	EM-090	44 lbs, Class F	44 lbs
Wood	EM-090	44 lbs, Class F	44 lbs
Analytical	EM-128	100 mg, Class S	100 mg
Analytical	EM-129	200 g, Class S	200 g

LIMITS OF WEIGHT RANGES

ANALYTICAL SCALE: ..... 50%-150% of dry filter weight, ± 0.1 mg
PLATFORM SCALE..... 20%-80% of ideal test load weight, ± 0.1 lbs or 1%
WOOD SCALE ..... 20%-80% of ideal test load weight, ± 0.01 lbs or 1%

POLYTESTS
TESTING THROUGH YOUR REALITY

CONTINUOUS ANALYZERS

Date: 2016-01-12 Manufacturer: Woodstock Soapstone Model: 211

Project #: PI 20122 Run: 4 Tech: MM Reviewer: DP

FOR TUNNELS < 12 in

Barometric pressure (P_{bar}) 101,5 (KPa.) Static pressure (P_q) 0,27 (inches w.c.)
Inside diameter: Port A _____ Port B ____.
Tunnel cross sectional area: .1963Ft^2
Pitot tube type: Standard

Traverse Point	Position (inches)			Velocity Head Δ_p (inches H_2O)	Tunnel Temperature (°F)	$\sqrt{\Delta_p}$
	6 po	7 po	8 po			
A- Centroid	3.00	3.50	4	0,065	80,13	
B - Centroid	3.00	3.50	4	0,064	75,98	
A-1	0.40	0.50	0.50	0,055	79,61	
A-2	1.50	1.75	2	0,063	78,00	
A-3	4.50	5.25	6	0,068	76,25	
A-4	5.60	6.5	7.5	0,056	76,00	
B-1	0.40	0.50	0.50	0,055	75,50	
B-2	1.50	1.75	2	0,061	75,41	
B-3	4.50	5.25	6	0,065	75,01	
B-4	5.60	6.5	7.5	0,056	74,94	DP
				AVERAGE		

$$v_s = K_p C_p (\sqrt{\Delta p})_{avg} \sqrt{\frac{(T_s)_{avg}}{P_s M_s}}$$

Where,
C_p = pitot tube coefficient, dimension less = 0.99 for standard pitot.
Δ_p = manometer reading (inches H_2O)
T_s = average absolute dilution tunnel temperature (°F + 460)
P_s = absolute dilution tunnel gas pressure or $P_{bar} + P_{qg}$
P_q = static pressure $\frac{\text{in. } H_2O}{\{\ 13.6\ \}}$
M_s = 28.56, wet molecular weight of stack gas (alternatively, it may be measured)
K_p = 85.49 pitot tube constant, (conversion factor for English units)

$\sqrt{\Delta_p}$avg. = average of the square roots of the velocity heads (Δ_p) measured at each traverse point.

POLYTESTS
TESTING THROUGH YOUR REALITY

CONTINUOUS ANALYZERS

Date: 2016-01-12 Manufacturer: Woodstock soapstone Model: 211

Project #: PI 20122 Run: 4 Tech: MM Reviewer: DP

Pre-Test (Adjust and Record)

	ZERO		SPAN		CAL. (Record Only)	
CO	0	0	2,972	2,921	1,004	1,00
Tolerance CO		+/- 0.02		+/- 0.15		+/- 0.05
CO_2	0	0	12,95	12,87	9,76	10,00
Tolerance CO2		+/- 0.02		+/- 0.5		+/- 0.5
O_2 informative CSA B415 calculated value	N.P	N.P	N.P	N.P	N.P	N.P
	Actual	Should Be	Actual	Should Be	Actual	Should Be

Post Test (Record Only)

	Zero	Span	Cal.	Zero Drift	Limit	Span Drift	Limit	Cal. Drift	Limit	OK?	Not OK*
CO	0	2,969	1,001	0	0.02	0,003	0.15	0,003	0.05	✓	
CO_2	0	12,90	9,73	0	0.02	~~-0,003~~ 0,03 MM	0.5	0,03	0.5	✓	
O_2	N.P	N.P	N.P	N.P	na	N.P	na	N.P	na		

POLYTESTS
TESTING THROUGH YOUR REALITY

TEST DATA LOG

Date: 2016-01-12 Manufacturer: Woodstock soapstone Model: 211

Project #: PI 20122 Run: 4 Tech: M M. Reviewer: DP

RAW DRY GAS METER READINGS

	System 1	System 2	System 2
Final (Liter)	346752.85	303440.70	909.61
Initial (Liter)	344666.59	301434.20	852.15
Flow meter (Liter)	NA	NA	NA

AMBIENT CONDITIONS

	Before	After
Barometer (kPa):	101.5	101.4
Dry Bulb (F):	72.5	74.5
Humidity (%):	18.3	21

POLYTESTS
TESTING THROUGH YOUR REALITY

FUEL DATA

Date: 2016-01-12 Manufacturer: woodstock soapstone Model: 211

Project #: pI 20122 Run: 4 Tech: M.M. Reviewer: DP

FUEL DESCRIPTION:

Type of wood :

PRE-TEST LOAD

Piece Size	Weight	Meter Moisture Content (% dry)*				
2 x 4 x 5,25 in.	0,712 lbs.	20,0	21,8	21,9	22	22,1
2 x 4 x 5,25 in.	0,644 lbs.	21,1	21,6	21,5	21,3	21,0
2 x 4 x 5,25 in.	0,650 lbs.	21,6	21,4	21,4	21,5	21,8
2 x 4 x 5,25 in.	0,686 lbs.	21,8	21,9	22	21,9	22
2 x 4 x 5,25 in.	0,638 lbs.	21,6	22,0	21,8	21,5	21,3
2 x 4 x 5,25 in.	0,628 lbs.	21,3	21,5	21,3	21,2	21,0
2 x 4 x 5,25 in.	0,636 lbs.	20,9	21,5	21,6	21,3	21,5
2 x 4 x 5,25 in.	0,654 lbs.	20,8	21,3	21,6	21,0	21,0
2 x 4 x 5,25 in.	0,636 lbs.	21,7	21,8	20,0	19,9	20
2 x 4 x 6,5 in.	0,824 lbs.	20,1	21,6	20,3	20,3	20,2
2 x 4 x 6,5 in.	0,828 lbs.	20,6	21,3	21,6	20,9	20,9
2 x 4 x 6,5 in.	0,878 lbs.	20,9	20,8	21,1	20,3	21,0
2 x 4 x 6,5 in.	1,05 lbs.	21,3	21,0	21,0	20,9	20,8
2 x 4 x 6,5 in.	0,816 lbs.	21,3	21,3	21,0	20,8	20,6
2 x 4 x 6,5 in.	0,83 lbs.	22	21,9	21,3	21,0	20,8
2 x 4 x 6,5 in.	0,952 lbs.	21,9	21,6	21,0	21,0	20,8
2 x 4 x 6,5 in.	0,776 lbs.	22,0	21,9	22,0	21,3	21,3
2 x 4 x 6,5 in.	1,064 lbs.	21,8	19,9	20,0	21,0	20,9
2 x 4 6,5 in	0,782	21,3	19,8	19,9	19,8	19,7

TEST LOAD WEIGHT: 14,68 lbs

POLYTESTS
TESTING THROUGH YOUR REALITY

FUEL DATA

Date: 2016-01-12 Manufacturer: Woodstock Soapstone Model: 211

Project #: PI 20122 Run: 4 Tech: M.M. Reviewer: DP

FUEL DESCRIPTION:

Type of wood :

TEST LOAD

Piece Size	Weight	Meter Moisture Content (% dry)*				
1 1/2 x 3/4 x 16 in.	1,73 lbs.	22	21,6	21,9	21,8	21,0
1 1/2 x 3 1/2 x 16 in.	1,47 lbs.	21,2	21,1	21,9	21,0	20,8
1 1/2 x 3 1/2 x 16 in.	1,38 lbs.	21,0	21,8	21,8	21,0	20,6
1 1/2 x 3 1/2 x 16 in.	1,64 lbs.	21,3	21,7	21,5	20,8	20,9
3 1/2 x 3 1/2 x 16 in.	4,05 lbs.	20,7	21,6	21,0	20,9	20,8
3 1/2 x 3 1/2 x 16 in.	4,22 lbs.	20,0	20,4	20,6	20,3	20,2
1 1/2 x 3/4 x 5 in.	0,096 lbs.			20,6		
1 1/2 x 3/4 x 5 in.	0,098 lbs.			20,9		
1 1/2 x 3/4 x 5 in.	0,11 lbs.			21,1		
1 1/2 x 3/4 x 5 in.	0,106 lbs.			21,6		
1 1/2 x 3/4 x 5 in.	0,096 lbs.			21,3		
1 1/2 x 3/4 x 5 in.	0,104 lbs.			20,8		
1 1/2 x 3/4 x 5 in.	0,096 lbs.			20,6		
1 1/2 x 3/4 x 5 in.	0,094 lbs.			20,4		
1 1/2 x 3/4 x 5 in.	0,100 lbs.			20,2		
1 1/2 x 3/4 x 5 in.	0,096 lbs.			20,8		
1 1/2 x 3/4 x 5 in.	0,100 lbs.			21,0		
1 1/2 x 3/4 x 5 in.	0,098 lbs.			21,8		
1 1/2 x 3/4 x 5 in.	0,098 lbs.			21,2		
1 1/2 x 3/4 x 5 in.	0,108 lbs.			21,0		
1 1/2 x 3/4 x 5 in.	0,104 lbs.			20,9		
1 1/2 x 3/4 x 5 in.	0,108 lbs.			20,8		
1 1/2 x 3/4 x 5 in.	0,112 lbs.			20,6		

TEST LOAD WEIGHT: _____ lbs

Min 20%: .....

Max 25%: _____

Rev.2 6/14/2021

POLYTESTS
TESTING THROUGH YOUR REALITY

FUEL DATA

Date: 20 16 04 12 Manufacturer: wood stock soapstone Model: 211

Project #: PI 20122 Run: 4 Tech: MM Reviewer: SP

FUEL DESCRIPTION:

Type of wood : suite

TEST LOAD

Piece Size	Weight	Meter Moisture Content (% dry)*				
1 1/2 x 0,75 x 5 in.	0,100 lbs.			21		
1 1/2 x 0,75 x 5 in.	0,098 lbs.			20,8		
1 1/2 x 0,75 x 5 in.	0,098 lbs.			21,1		
1 1/2 x 0,75 x 5 in.	0,098 lbs.			20,9		
1 1/2 x 0,75 x 5 in.	0,11 lbs.			19,9		
1 1/2 x 0,75 x 5 in.	0,094 lbs.			19,8		
1 1/2 x 0,75 x 5 in.	0,098 lbs.			19,6		
x x in.	lbs.					
x x in.	lbs.					
x x in.	lbs.					
x x in.	lbs.					
x x in.	lbs.					
x x in.	lbs.					
x x in.	lbs.					
x x in.	lbs.					
x x in.	lbs.					
x x in.	lbs.					
x x in.	lbs.					
x x in.	lbs.					
x x in.	lbs.					
x x in.	lbs.					
x x in.	lbs.					
x x in.	lbs.					

TEST LOAD WEIGHT: 19 lbs

Min 20%: 3,39 16,93 MM

Max 25%: 4,23

POLYTESTS
TESTING THROUGH YOUR REALITY

DILUTION TUNNEL PARTICULATE SAMPLER DATA

Date: 2016-01-11 Manufacturer: woodstock soapstone Model: 211

Project #: pI 20122 Run: 4 Tech: MM Reviewer: DO

Rev.2 6/14/2021

Pre-test Weight Record		SYSTEM 1 – 1st hour				SYSTEM 1				
		Probe & Housing Number	Front Filter Number	Back Filter Number	gaskets	Probe & Housing Number	Front Filter Number	Back Filter Number	gaskets	Blanck
Date	Time	18	800	801	1	34	809	810	5	838
2016-01-11	17:00	108,9503	0,1261	0,1265	11,0501	110,1020	0,1270	0,1261	10,4444	0,1278
2016-01-12	8:30	108,9504	0,1262	0,1266	11,0502	110,1021	0,1271	0,1261	10,4445	0,1279

Post-test Weight Record		SYSTEM 1 – 1st hour				SYSTEM 1				
		Probe & Housing Number	Front Filter Number	Back Filter Number	gaskets	Probe & Housing Number	Front Filter Number	Back Filter Number	gaskets	Blanck
Date	Time	18	800	801	1	34	809	810	5	838
2016-01-12	~~8:00~~ 8:00 AM	108,9514	0,1263	0,1264	11,0519	110,1028	0,1275	0,1265	10,4464	0,1283
2016-01-19	8:15	108,9505	0,1261	0,1263	11,0508	110,1021	0,1272	0,1262	10,4452	0,1280
2016-01-19	16:15	108,9505	0,1261	0,1263	11,0507	110,1021	0,1272	0,1262	10,4452	0,1280

POLYTESTS
TESTING THROUGH YOUR REALITY

DILUTION TUNNEL PARTICULATE SAMPLER DATA

Date: 2016-01-11 Manufacturer: Woodstock Soapstone Model: 211

Project #: pI 20122 Run: 4 Tech: MM Reviewer: DO

Pre-test Weight Record		SYSTEM 2			
		Probe & Housing Number	Front Filter Number	Back Filter Number	gaskets
Date	Time	35	831	834	22
2016-01-11	17:00	109,2835	0,1261	0,1277	10,0030
2016-01-12	8:30	109,2836	0,1263	0,1278	10,0030

Post-test Weight Record		SYSTEM 2			
		Probe & Housing Number	Front Filter Number	Back Filter Number	gaskets
Date	Time	35	831	834	22
2016-01-12	~~8:00~~ 20:00 MN	109,2841	0,1272	0,1283	10,0045
2016-01-19	8:15	109,2837	0,1268	0,1280	10,0033
2016-01-19	16:15	109,2837	0,1268	0,1280	10,0032

Rev.2 6/14/2021

Paramètres

Tous les facteurs de corrections et autres paramètres qui peuvent être modifiés par l'utilisateur du fichier sont regroupés ici.

Code verrouillage:	WOO	

Description du test

Test standard	EPA	
Run #	5	
Date	13-01-2016	
Technicien	M.M	
Project #	PI-20122	

Description de l'unité

Manufacturier	Woodstock Soapstone	
Modèle	211	
Combustion system	Cat	
Appliance type	Hybrid woodstove	
Firebox volume	2,5	cu ft.
Appliance weight empty	600	lbs
Appliance weight full	600	lbs

Paramètres du test

Logging time	1	min
Manufacturer's rated heat output	na	BTU/h Donnée fournie par le manfacturier
Targeted category	1	
Targeted output	à définir	BTU/h
Cp steel	0,1	BTU/lb-°F

Échantillonnage

Blank sampling rate	0,20	cuft/min
Internal probe diameter	0,18	in.
Calibration Factor (DGM #1):	0,996	Dimensionless
Equipment number (DGM #1):	EM-178	
Calibration Factor (DGM #2):	0,990	Dimensionless
Equipment number (DGM #2):	EM-179	
Calibration Factor (DGM #3):	1,000	
Equipment number (DGM #3):	EM-070	Dimensionless

Tunnel

Targeted tunnel flow rate	160	scfm
Tunnel diameter	6	in.
Molecular weight	29	
Pitot tube type	Standard	
Pitot tube coefficient	0,99	Dimensionless

Project nu.	PI-20122
Date	13-01-2016
Technicien	M.M

Fuel data

Fuel type	Dimension	
Fuel specie	D. Fir	
HHV	19810,0	kJ/kg
%C	48,7	
%H	6,9	
%O	43,9	
%Ash	0,5	
HHV	8519,2	Btu/lb
LHV	7451,0	Btu/lb

Default Fuel Values

	D. Fir	Oak/Maple
HHV	19 810	19 887
%C	48,73	50
%H	6,87	6,6
%O	43,9	42,9
%Ash	0,5	0,5
HHV (Btu/lb)	8519	8552
LHV (Btu/lb)	7451	7480

Data 2016-01-13 EPA PI-20122 run5

	Start	End
Barometer (kPa):	100,6	101,1
Barometer (in.Hg):	29,707169	29,854819
Dry Bulb (F):	67,1	75,74
Humidity (%):	18,1	15
Air velocity (ft/min)	22	20

DGM #1	Final:	12295,030	cuft	Final:	348156,480	Liter
	Initial:	12245,529	cuft	Initial:	346754,770	Liter
DGM #2	Final:	10763,582	cuft	Final:	304790,680	Liter
	Initial:	10715,970	cuft	Initial:	303442,480	Liter
DGM room				Final:	931,690	cuft
				Initial:	899,610	cuft

Numéro de la ligne dans "Raw data" à partir duquel les données du VRAI test commencent: 174

Autres données à rentrer: dans preload data, load data, traverse et filter set weight

Project nu.	PI-20122
Date	13-01-2016
Technicien	M.M

Preload data sheet

Test Load Weight:

Lower	Ideal	Upper
15,75	17,50	19,25

Load Volume: 0,4618 cu. ft

Loading Density: 5,519 lbs./ft3

Number of Spaces:

Spacer weight (lbs):

Load Density (wet): 29,878 lbs./ft3

Dry Wood Density: 24,877471

Piece Size (in): Thick	Wide	x Length	Weight lbs	Meter Moisture Content Dry Uncorrected %					Ave. MC x Weight	Volume Cubic Inches
2	4	5,25	0,758	20,1					15,2358	42,00
2	4	5,25	0,624	20,3					12,6672	42,00
2	4	5,25	0,582	21					12,222	42,00
2	4	5,25	0,62	20,6					12,772	42,00
2	4	5,25	0,764	20,3					15,5092	42,00
2	4	5,25	0,592	20,1					11,8992	42,00
2	4	5,25	0,592	20					11,84	42,00
2	4	5,25	0,8	19,9					15,92	42,00
2	4	5,25	0,572	19,3					11,0396	42,00
2	4	5,25	0,766	20,6					15,7796	42,00
2	4	5,25	0,772	20,1					15,5172	42,00
2	4	5,25	0,88	20,6					18,128	42,00
2	4	5,25	0,842	20,3					17,0926	42,00
2	4	5,25	0,762	19,8					15,0876	42,00
2	4	5,25	0,782	19,9					15,5618	42,00
2	4	5,25	0,754	19,8					14,9292	42,00
2	4	5,25	0,78	19,9					15,522	42,00
2	4	5,25	0,744	19,8					14,7312	42,00
2	4	5,25	0,812	19,6					15,9152	42,00
										0,00
										0,00
										0,00
										0,00
										0,00
										0,00
										0,00
								SUM MC:	277,3694	

PreTest Load Weight: 13,80 lbs.

Dry Weight: 5,21 kg.

Average Moisture Content: %

Dry: 20,10

20,10

Must be 18-28

Wet: 16,74

must be 15,2-22

Project nu.	PI-20122
Date	13-01-2016
Technicien	M.M

FUEL LOAD DATA SHEET, CSA B415

Test Load Weight:

Lower	Ideal	Upper
15,8	17,5	19,3

* For boilers, a loading density factor of 10 lb/ft3 is applied

Load Volume: 0,54 cu. ft

Loading Density: 6,9 lbs./ft3

Number of Spaces: 24

Spacer weight: lbs

Load Density (wet): 31,8 lbs./ft3

Dry Wood Density: 26,4 lbs./ft3

Piece Size (in): Thick	Wide	›Length	Weight lbs	Meter Moisture Content Dry Uncorrected %					Ave. MC x Weight	Volume Cubic Inches	Ave. MC %
1,5	3,3	16	1,62	19,80	21,10	22,20	22,10	22,00	34,7328	79,20	21,4
1,5	3,3	16	1,65	22,90	22,90	23,00	21,50	21,90	37,026	79,20	22,4
1,5	3,3	16	1,68	22,70	21,30	22,30	22,50	23,00	37,5648	79,20	22,4
1,5	3,3	16	1,73	22,20	22,90	22,30	22,60	22,50	38,925	79,20	22,5
3,5	3,5	16	4,07	21,70	21,10	20,00	19,90	20,80	84,249	196,00	20,7
3,5	3,5	16	3,98	19,10	21,30	21,00	19,80	20,20	80,7144	196,00	20,3
1,5	0,75	5	0,12			21,00			2,562	5,63	21,0
1,5	0,75	5	0,10			19,80			1,9404	5,63	19,8
1,5	0,75	5	0,11			19,60			2,0776	5,63	19,6
1,5	0,75	5	0,10			20,30			2,03	5,63	20,3
1,5	0,75	5	0,11			20,60			2,266	5,63	20,6
1,5	0,75	5	0,11			20,90			2,3408	5,63	20,9
1,5	0,75	5	0,10			20,90			2,1736	5,63	20,9
1,5	0,75	5	0,10			19,60			1,9208	5,63	19,6
1,5	0,75	5	0,10			19,90			1,99	5,63	19,9
1,5	0,75	5	0,10			20,00			2	5,63	20,0
1,5	0,75	5	0,11			20,10			2,211	5,63	20,1
1,5	0,75	5	0,10			21,00			2,142	5,63	21,0
1,5	0,75	5	0,11			21,80			2,4416	5,63	21,8
1,5	0,75	5	0,11			20,00			2,2	5,63	20,0
1,5	0,75	5	0,106			20,00			2,12	5,63	20,0
1,5	0,75	5	0,104			20,30			2,1112	5,63	20,3
1,5	0,75	5	0,106			20,60			2,1836	5,63	20,6
1,5	0,75	5	0,102			20,9			2,1318	5,63	20,9
1,5	0,75	5	0,11			21			2,31	5,63	21,0
1,5	0,75	5	0,112			21,3			2,3856	5,63	21,3
1,5	0,75	5	0,112			20,5			2,296	5,63	20,5
1,5	0,75	5	0,102			20,3			2,0706	5,63	20,3
1,5	0,75	5	0,112			21			2,352	5,63	21,0
1,5	0,75	5	0,134			20,6			2,7604	5,63	20,6
								SUM MCx'	366,229		20,7 %

Test Load Weight: 17,31 lbs.

Dry Weight: 6,51 kg.

Average Moisture Content: %

Dry: 20,72 Dry(EPA) 20,72

Dry(B415 21,15

20,72

Must be 19-25

Wet: 17,17

must be 15,2-22

Coal Bed Range: 3,5 lbs. to 4,3 lbs.

TEST CHARGE:

Coal bed weight: 4,2 lbs.

Project nu.	PI-20122
Date	13-01-2016
Technicien	M.M

Tunnel Traverse Worksheet (for velocity calculations)

Static Pressure:	0,27	in. H20
Barometer:	29,900	in. Hg

Pour un tunnel de 12" et plus, prendre 6 lectures

	TUNNEL VELOCITY	TUNNEL TEMP	SQUARE ROOT
	In. wc	°F	
A center			0,0000
B center			0,0000
A1			0,0000
A2			0,0000
A3			0,0000
A4			0,0000
A5			0,0000
A6			0,0000
B1			0,0000
B2			0,0000
B3			0,0000
B4			0,0000
B5			0,0000
B6			0,0000
AVERAGE	#DIV/0!	#DIV/0!	0,0000

PITOT CONSTANT=
0,938

Pour un tunnel moins de 12", prendre 4 lectures

	TUNNEL VELOCITY	TUNNEL TEMP	SQUARE ROOT
	In. wc	°F	
A center	0,065	66,01	0,2550
B center	0,065	68,41	0,2550
A1	0,055	66,51	0,2345
A2	0,062	66,91	0,2490
A3	0,067	67,81	0,2588
A4	0,057	68	0,2387
B1	0,056	68,410	0,2366
B2	0,061	68,980	0,2470
B3	0,066	69,010	0,2569
B4	0,056	69,060	0,2366
AVERAGE	0,0610	67,9110	0,2468

Project nu.	PI-20122
Date	13-01-2016
Technicien	M.M

Filter set weight

	System 1 (g) 1st hour				System 1 (g)				System 2 (g)				Ambient blank (g)	Date	Heure
	probe	front	back	gasket	probe	front	back	gasket	probe	front	back	gasket	Filter		
Number	33	806	807	20	6	802	805	3	2	11	200	2	808		
Before (1)															
Before (2)															
Before (3)															
Before (4)															
Before (5)	109,3608	0,1261	0,1276	10,2777	61,3785	0,1268	0,1284	10,1138	61,1025	0,1283	0,1254	10,2135	0,1258	2016-01-12	17:00
Before (6)	109,3607	0,1260	0,1276	10,2778	61,3786	0,1269	0,1283	10,1138	61,1026	0,1285	0,1253	10,2134	0,1259	2016-01-13	09:00
After (1)	109,3611	0,1266	0,1277	10,2793	61,3788	0,1271	0,1280	10,1162	61,1026	0,1289	0,1254	10,2151	0,1261	2016-01-13	17:00
After (2)	109,3611	0,1265	0,1274	10,2782	61,3788	0,1271	0,1280	10,1145	61,1026	0,1286	0,1254	10,2150	0,1259	2016-01-19	08:30
After (3)	109,3611	0,1265	0,1274	10,2781	61,3788	0,1271	0,1280	10,1145	61,1026	0,1286	0,1254	10,2150	0,1259	2016-01-19	16:45
After (4)															
After (5)															
After (6)	109,3611	0,1265	0,1274	10,2781	61,3788	0,1271	0,1280	10,1145	61,1026	0,1286	0,1254	10,2150	0,1259	2016-01-19	16:45
Difference	0,0004	0,0005	-0,0002	0,0003	0,0002	0,0002	-0,0003	0,0007	0,0000	0,0001	0,0001	0,0016	0,0000		
Total (mg)		1				1,8				1,8			0		
Total ajusté (mg)		**1,00**				**1,80**				**1,80**					

"All components of the filter catch are dessicated and weighed before and after each test.
Small PM 2.5 catches may result in negative numbers, because, for example, a small piece of the filter might get stuck to the gasket.
Since all components are dessicated and weighed, we certify that the total weight is accurate. No chemicals or solvents are used to remove PM from the compone

Project nu.	PI-20122
Date	13-01-2016
Technicien	m.m

SFBA EPA EMISSION RESULTS

Test Duration: **269** min

PRESSURE FACTOR:	DGM 1	0,96665	
	DGM 2	0,97331	
	DGM 3	0,99535	
TEMPERATURE FACTORS	DGM 1	0,98274	
	DGM 2	0,98188	
	DGM 3	0,98730	
VOLUMES SAMPLED	DGM 1	46,842	SCft
	DGM 2	45,048	Scft
	DGM 3	31,526	SCft

TOTAL TUNNEL VOLUME : 48315

SAMPLE RATIOS

Sample Train 1:	1031,441
Sample Train 2:	1072,522

Paticulate concentration

Sample Train 1	**0,000038**	g/dscf
Sample Train 2	**0,000040**	g/dscf
Room	**0,000000**	g/dscf

TOTAL EMISSIONS

Sample Train 1	**1,86**	g
Sample Train 2	**1,93**	g

EMISSION RATES

Sample Train 1	**0,41**	g/hr
Sample Train 2	**0,43**	g/hr
1st hour emission rate	**1,03**	g/hr

	Train 1	Train 2
Cs	3,843E-05	3,99572E-05

RESULTS

Average emission rate: 0,4 g/hr

Burn Rate : 1,451 Dry kg/hr

BAROMETRIC PRESSURE

Average:	29,780994	in Hg
Start:	29,707169	in Hg
End:	29,854819	in Hg

DGM CONTROLLER VALUES

DGM 1	Final:	12295,030	Cuft
	Initial:	12245,529	Cuft
DGM 2	Final:	10763,582	Cuft
	Initial:	10715,970	Cuft
DGM #3	Final:	931,690	Cuft
	Initial:	899,610	Cuft

TEMPERATURES

DGM 1	537,275	°R
DGM 2	537,742	°R

CALIBRATION FACTORS

DGM 1	0,9961
DGM 2	0,9901
DGM #3	1,0000

TUNNEL FLOW RATE: 179,610 Dscfm

PARTICULATE CATCH

Total Sample Train 1:	1,80	mg
Total Sample Train 2:	1,80	mg
Total Sample Train 1 1st hour:	1,00	mg

DEVIATION: 1,95%

Data 2016-01-13 EPA PI-20122 run5

Manufacturer: Woodstock Soapstone
Model: 211

Run: 5
Project #: PI-20122
Test Duration: 269 min

	HHV	LHV
Eff	76,25%	82,41%
Comb Eff	99,50%	99,50%
HT Eff	76,63%	82,82%
Output	21 923	kJ/h
Burn Rate	1,45	kg/h
Grams CO	13	g
Input	28 753	kJ/h
MC wet	17,17	

Note: In the "Input data", "Calc. % O_2", "Fuel Properties", and "Mass Balance" columns, [e], [d], [g], [a]. [b], [c], [h], [u], [w], [j], and [k] refer to their respective variables in Clauses 13.7.3

	Ultimate CO_2
$CO_{2\text{-ult}}$	19,64
	F_0
	1,060

Overall Heating Efficiency:	76,25%	
Combustion Efficiency:	99,50%	
Heat Transfer Efficiency:	76,63%	

Air Fuel Ratio (A/F)	
Dry Molecular Weight (M_d)	29,64
Dry Moles Exhaust Gas (N_f):	547,24
Air Fuel Ratio (A/F)	15,71

Heat Output:	20 797	Btu/h	21 923	kJ/h
Heat Input:	27 275	Btu/h	28 753	kJ/h
Burn Duration:	4,48	h		
Burn Rate:	3,20	lb/h	1,451	kg/h
Stack Temp:	305,8	Deg. F	152,1	Deg. C

POLYTESTS
TESTING THROUGH YOUR REALITY

Date: 2016 01 13 Manufacturer: woodstock soapstone Model: 211
Project #: PI 20122 Run: 5 Tech: MM Reviewer: DP

- kindling and preload 149 LBS START FIRE
- At 148 LBS close by pass
- laisse porte va per craquer
- At 104 LBS close air inlet
- At 8,00 Brasser feu ramener
  Morceau vers milieu
- At 61 LBS Brasser feu ramener
  Morceau vers milieu
- At 44 LBS Brasser feu ramener morceau
  vers milieu
- D 4,2 insert load 1,3 1:30
- Fermer porte complètement
- close air inlet immediatement
  4:31

TEST LOAD CONFIGURATION

POLYTESTS
TESTING THROUGH YOUR REALITY

Date:_____ Manufacturer:_____ Model:_____

Project #: _____ Run:_____ Tech:_____ Reviewer:_____

Side view	Front view	Top view

Rev.2 6/14/2021

POLYTESTS
TESTING THROUGH YOUR REALITY

Date:_____ Manufacturer:_____ Model:_____

Project #: _____ Run:_____ Tech:_____ Reviewer:_____

	ADDITION		SUBSTRACTION	
	ft3	Volume	ft3	Volume
V measure				
V ashlip				
%				
V usable				

Usable Firebox: _____

Test load weight: _____ Minimum: _____ Maximum: _____

Déviation: _____

POLYTESTS
TESTING THROUGH YOUR REALITY

PRE / POST CHECKS

Date: 2016-01-13 Manufacturer: Woodstock Soapstone Model: 211
Project #: pI 20/22 Run: 5 Tech: MM Reviewer: DP

Moisture Meter Calibration Check:

Equipment #	Time	12%	22%
EM-191	7:00	ok	ok

Pre-Test Post-Test

Facility Conditions:

	Pre-Test	Post-Test
Air Velocity from less than 2 feet	22 (max50 Fpm)	22 (max50 Fpm)
Smoke Capture Check	ok	ok
Picture (4 sides)	ok	ok

Wood Heater Conditions:

Date Wood Heater Stack Cleaned	2016-01-04
Date Dilution Tunnel Cleaned	2016-01-04
Induced Draft Check (max 0.005 H2O)	ok
Traverse before ignition	ok
Flow Rate 140 cfm ±10%	ok

Temperature System:

Ambient (65°-90°F)	ok	°F
Wood Heater Surface (±125°F)	ok	°F

Proportional Checks:

Thermocouple check	ok
Pitot Clean	ok
Pitot verification	ok

Sampling Train ID Numbers:

	Train 1st hour	Train 1	Train 2
Probe	02	06	33
Filter Front	"	802	806
Filter Back	200	805	807
Filter Thermocouple	"	"	"
Filter (<90°F)	ok	ok	ok

POLYTESTS
TESTING THROUGH YOUR REALITY

SAMPLING EQUIPMENT CHECK OUT

Date: Jab 01 13 Manufacturer: Wood Stock Soapstone Model: 211

Project #: pI 20122 Run: 5 Tech: MM Reviewer: DP

Leakage Checks Tunnel Samplers

	System 1st hour		System 1		System 2	
Unplugged Flow Rate = .25cfm	Pre-Test ASTM (-15) CSA B415 (-5)	Post-Test (max test)	Pre-Test ASTM (-15) CSA B415 (-5)	Post-Test (Max test)	Pre-Test ASTM (-15) CSA B415 (-5)	Post-Test (Max test)
Vacuum (inches Hg.)	-15	-15	-15	-15	-15	-15
Final 1minute DGM (Liter)	346753,78	348157,07	346753,87	348157,13	303442,01	304791,42
Initial 1minute DGM (Liter)	346753,77	348157,06	346753,86	348157,13	303442,00	304791,41
Change © (Liter)	0,01	0,01	0,01	~~0~~	0,01	0,01
Allowable leakage .04 x Sample rate or 0.28Lpm CSA B415 (0.56)						
Check OK	ok	ok	ok	ok	ok	ok

Leakage Checks Flue Gas Sampler

Plugged Probe	Pre Test	Post Test
Vacuum (inches Hg.)	-5	-5
Rotometer Reading (mml/min.)	0	0
Flow Rate (lpm)	1.5	1.5
Allowable (.02 x Sample Rate)	30	30
Check OK	ok	ok

Leakage Checks Pitot

Plugged Probe	Pre Test 3 H2o static	Pre Test 0.4-0.5 H2o velocity	Post Test 3 H2o Static	Post Test 0.4-0.5 H2o velocity
Vacuum (inches Hg.)	3	.5	3 ~~-4~~ mm	~~ok~~ .4 mm
Check OK (no change after 15 sec.)	ok	ok	ok	ok

POLYTESTS
TESTING THROUGH YOUR REALITY

PRE-TEST SCALE AUDIT

Date: 2016-07-13 Manufacturer: Woodstock Soapstone Model: 211
Project #: PT 20122 Run: 5 Tech: MM. Reviewer: DP

Scale Type	Audit		Measured Weight
	Equipment #	Weight	
Platform	EM-096	4.4 lbs, Class F	4.4 lbs
Wood	EM-098	4.4 lbs, Class F	4.4 lbs
Analytical	EM-128	100 mg, Class S	100 mg
Analytical	EM-129	200 g, Class S	200 g

LIMITS OF WEIGHT RANGES

ANALYTICAL SCALE: ..... 50%-150% of dry filter weight, ± 0.1 mg
PLATFORM SCALE..... 20%-80% of ideal test load weight, ± 0.1 lbs or 1%
WOOD SCALE ..... 20%-80% of ideal test load weight, ± 0.01 lbs or 1%

POLYTESTS
TESTING THROUGH YOUR REALITY

CONTINUOUS ANALYZERS

Date: 2016-01-13 Manufacturer: Woodstock Soapstone Model: 211
Project #: PI 20122 Run: 5 Tech: M.M. Reviewer: DP

FOR TUNNELS < 12 in

Barometric pressure (P_{bar}) 100.6 (KPa.) Static pressure (P_q) 0.27 (inches w.c.)
Inside diameter: Port A _____ Port B _____.
Tunnel cross sectional area: .1963Ft^2
Pitot tube type: Standard

Traverse Point	Position (inches)			Velocity Head Δ_p (inches H_2O)	Tunnel Temperature (°F)	$\sqrt{\Delta_p}$
	6 po	7 po	8 po			
A- Centroid	3.00	3.50	4	0.065	66.01	
B - Centroid	3.00	3.50	4	0.065	68.41	
A-1	0.40	0.50	0.50	0.055	66.51	
A-2	1.50	1.75	2	0.062	66.91	
A-3	4.50	5.25	6	0.067	67.81	
A-4	5.60	6.5	7.5	0.057	68.00	
B-1	0.40	0.50	0.50	0.056	68.41	
B-2	1.50	1.75	2	0.061	68.98	
B-3	4.50	5.25	6	0.066	69.01	
B-4	5.60	6.5	7.5	0.056	69.06	ΔP
				AVERAGE		

$$v_s = K_p C_p (\sqrt{\Delta p})_{avg} \sqrt{\frac{(T_s)_{avg}}{P_s M_s}}$$

Where,
C_p = pitot tube coefficient, dimension less = 0.99 for standard pitot.
Δ_p = manometer reading (inches H_2O)
T_s = average absolute dilution tunnel temperature (°F + 460)
P_s = absolute dilution tunnel gas pressure or $P_{bar} + P_{qg}$
P_q = static pressure $\frac{\text{in. } H_2O}{\{\ 13.6\ \}}$
M_s = 28.56, wet molecular weight of stack gas (alternatively, it may be measured)
K_p = 85.49 pitot tube constant, (conversion factor for English units)

$\sqrt{\Delta_p}$avg. = average of the square roots of the velocity heads (Δ_p) measured at each traverse point.

POLYTESTS
TESTING THROUGH YOUR REALITY

CONTINUOUS ANALYZERS

Date: 2016-01-13 Manufacturer: Woodstock Soapstone Model: 211

Project #: pJ 20122 Run: 5 Tech: MM Reviewer: DP

Pre-Test (Adjust and Record)

	ZERO		SPAN		CAL. (Record Only)	
CO	0	0	2,971	2,971	1,005	1,00
Tolerance CO		+/- 0.02		+/- 0.15		+/- 0.05
CO_2	0	0	17,95	17,81	9,78	10,00
Tolerance CO2		+/- 0.02		+/- 0.5		+/- 0.5
O_2 informative CSA B415 calculated value	NA	N.A	NA	NA	N.A	N.A
	Actual	Should Be	Actual	Should Be	Actual	Should Be

Post Test (Record Only)

	Zero	Span	Cal.	Zero Drift	Limit	Span Drift	Limit	Cal. Drift	Limit	OK?	Not OK*
CO	0,007	2,975	1,013	0,007	0.02	0,004	0.15	0,008	0.05	✓	
CO_2	mr. ~~0,01~~ 10,01	17,86	9,75	0,01	0.02	0,09	0.5	0,03	0.5	✓	
O_2	N.A	N.A	N.A	N.A	na	N.A	na	N.A	na	N.A	N.A

POLYTESTS
TESTING THROUGH YOUR REALITY

TEST DATA LOG

Date: 2016-01-13 Manufacturer: woodstock soapstone Model: 211
Project #: PT 20122 Run: 5 Tech: M.M. Reviewer: DP

RAW DRY GAS METER READINGS

	System 1	System 2	System 2
Final (Liter)	348 156 48	304 790 68	931,69
Initial (Liter)	346754,77 ~~346754~~, M.M.	303442,48	899,61
Flow meter (Liter)	N.D	N.D	N.A

AMBIENT CONDITIONS

	Before	After
Barometer (kPa):	100,6	101,1
Dry Bulb (F):	67,1	75,74
Humidity (%):	18,1	15,0

POLYTESTS
TESTING THROUGH YOUR REALITY

FUEL DATA

Date: 2016-01-13 Manufacturer: woodstock soapstone Model: 217
Project #: pI 20122 Run: 5 Tech: MM Reviewer: DP

FUEL DESCRIPTION:

Type of wood :

PRE-TEST LOAD

Piece Size	Weight	Meter Moisture Content (% dry)*				
2 x 4 x 5,25 in.	0,758 lbs.	20,1	21,0	19,9	19,8	19,6
2 x 4 x 5,25 in.	0,624 lbs.	20,3	20,1	21,0	20,3	20,7
2 x 4 x 5,25 in.	0,582 lbs.	21,0	20,3	20,4	20,4	20,5
2 x 4 x 5,25 in.	0,62 lbs.	20,6	21,0	20,9	20,8	20,1
2 x 4 x 5,25 in.	0,764 lbs.	20,3	20,2	20,3	20,6	20,4
2 x 4 x 5,25 in.	0,592 lbs.	20,1	21,0	20,8	20,6	19,9
2 x 4 x 5,25 in.	0,592 lbs.	20,0	21,1	19,8	19,6	19,9
2 x 4 x 5,25 in.	0,800 lbs.	19,9	20,0	21,0	20,3	20,5
2 x 4 x 5,25 in.	0,572 lbs.	19,3	20,6	20,7	20,6	20,3
2 x 4 x 6,5 in.	0,766 lbs.	20,6	20,5	20,3	20,6	20,4
2 x 4 x 6,5 in.	0,772 lbs.	20,1	21,1	21,3	21,1	21,0
2 x 4 x 6,5 in.	0,88 lbs.	20,6	20,3	20,6	20,3	20,0
2 x 4 x 6,5 in.	0,842 lbs.	20,3	19,1	19,3	19,6	19,9
2 x 4 x 6,5 in.	0,762 lbs.	19,8	20,1	20,3	20,6	20,5
2 x 4 x 6,5 in.	0,782 lbs.	19,9	20,3	20,6	20,8	21,0
2 x 4 x 6,5 in.	0,754 lbs.	19,8	20,6	20,3	21,0	20,9
2 x 4 x 6,5 in.	0,78 lbs.	19,9	19,8	20,1	20,6	20,4
2 x 4 x 6,5 in.	0,744 lbs.	19,8	20,1	20,3	20,4	20,3
2 x 4 x 6,5 in	0,812	19,6	20,8	20,7	20,5	20,3

TEST LOAD WEIGHT: 13,80 lbs

Rev.2 6/14/2021

POLYTESTS
TESTING THROUGH YOUR REALITY

FUEL DATA

Date: 2016-01-13 Manufacturer: wood stock soapstone Model: 211

Project #: pJ 20122 Run: 5 Tech: M.M. Reviewer: DP

FUEL DESCRIPTION:

Type of wood :

TEST LOAD

Piece Size	Weight	Meter Moisture Content (% dry)*				
1½ x 3½ x 16 in.	1,62 lbs.	19,8	21,2	22,2	22,1	22
1½ x 3½ x 16 in.	1,65 lbs.	22,9	22,9	23,0	21,5	21,9
1½ x 3½ x 16 in.	1,68 lbs.	22,1	21,3	22,3	22,5	23
1½ x 3½ x 16 in.	1,73 lbs.	22,2	22,9	22,3	22,6	22,5
3½ x 3½ x 16 in.	4,07 lbs.	21,7	21,1	20,0	19,9	20,8
3½ x 3½ x 16 in.	3,98 lbs.	19,1	21,3	21,0	19,8	20,2
1½ x 3/4 x 5 in.	0,122 lbs.			21		
1½ x 3/4 x 5 in.	0,98 lbs.			19,8		
1½ x 3/4 x 5 in.	0,106 lbs.			19,6		
1½ x 3/4 x 5 in.	0,100 lbs.			20,3		
1½ x 3/4 x 5 in.	0,11 lbs.			20,6		
1½ x 3/4 x 5 in.	0,112 lbs.			20,9		
1½ x 3/4 x 5 in.	0,104 lbs.			20,9		
1½ x 3/4 x 5 in.	0,098 lbs.			19,6		
1½ x 3/4 x 5 in.	0,100 lbs.			19,9		
1½ x 3/4 x 5 in.	0,100 lbs.			20,0		
1½ x 3/4 x 5 in.	0,11 lbs.			20,1		
1½ x 3/4 x 5 in.	0,102 lbs.			21,0		
1½ x 3/4 x 5 in.	0,112 lbs.			21,8		
1½ x 3/4 x 5 in.	0,11 lbs.			20,0		
1½ x 3/4 x 5 in.	0,106 lbs.			20,0		
1½ x 3/4 x 5 in.	0,104 lbs.			20,3		
1½ x 3/4 x 5 in.	0,106 lbs.			20,6		

TEST LOAD WEIGHT: 17,31 lbs

Min 20%: 3,46

Max 25%: 4,32

POLYTESTS
TESTING THROUGH YOUR REALITY

FUEL DATA

Date: 2016-01-12 Manufacturer: Woodstock Soapstone Model: 21

Project #: pT 20122 Run: 5 Tech: MM Reviewer: DP

FUEL DESCRIPTION:
Type of wood : Swift

TEST LOAD

Piece Size	Weight	Meter Moisture Content (% dry)*				
1 1/2 x 3/4 x 5 in.	0,102 lbs.			20,9		
1 1/2 x 3/4 x 5 in.	0,11 lbs.			21,0		
1 1/2 x 3/4 x 5 in.	0,112 lbs.			21,3		
1 1/2 x 3/4 x 5 in.	0,112 lbs.			20,5		
1 1/2 x 3/4 x 5 in.	0,102 lbs.			20,3		
1 1/2 x 3/4 x 5 in.	0,112 lbs.			21,0		
1 1/2 x 3/4 x 5 in.	0,104 lbs.			20,6		
x x in.	lbs.					
x x in.	lbs.					
x x in.	lbs.					
x x in.	lbs.					
x x in.	lbs.					
x x in.	lbs.					
x x in.	lbs.					
x x in.	lbs.					
x x in.	lbs.					
x x in.	lbs.					
x x in.	lbs.					
x x in.	lbs.					
x x in.	lbs.					
x x in.	lbs.					
x x in.	lbs.					
x x in.	lbs.					

TEST LOAD WEIGHT: _____ lbs

Min 20%:……..

Max 25%:_____

POLYTESTS
TESTING THROUGH YOUR REALITY

DILUTION TUNNEL PARTICULATE SAMPLER DATA

Date: 2016-01-12 Manufacturer: Woodstock Soapstone Model: 211

Project #: pI 20122 Run: 5 Tech: MM Reviewer: KP

Rev.2 6/14/2021

		~~SYSTEM 1 – 1st hour~~ System 2 D.P.				SYSTEM 1				
Pre-test Weight Record		Probe & Housing Number	Front Filter Number	Back Filter Number	gaskets	Probe & Housing Number	Front Filter Number	Back Filter Number	gaskets	Blanck
Date	Time	02	11	200	2	06	802	805	3	808
2016-01-12	17:00	61,1025	0,1283	0,1254	10,2135	61,3785	0,1268	0,1284	10,1138	0,1258
2016-01-13	9:00	61,1026	0,1285	0,1253	10,2134	61,3786	0,1269	0,1283	10,1138	0,1259

		SYSTEM 1 – 1st hour				SYSTEM 1				
Post-test Weight Record		Probe & Housing Number	Front Filter Number	Back Filter Number	gaskets	Probe & Housing Number	Front Filter Number	Back Filter Number	gaskets	Blanck
Date	Time	02	11	200	2	06	802	805	3	808
2016-01-13	17:00	61,1026	0,1289	0,1254	10,2151	61,3788	0,1271	0,1280	10,1162	0,1261
2016-01-19	8:30	61,1026	0,1286	0,1254	10,2150	61,3788	0,1271	0,1280	10,1145	0,1259
2016-01-19	16:45	61,1026	0,1286	0,1254	10,2150	61,3788	0,1271	0,1280	10,1145	0,1259

POLYTESTS
TESTING THROUGH YOUR REALITY

DILUTION TUNNEL PARTICULATE SAMPLER DATA

Date: 2016 01 12 Manufacturer: Wood stock Soapstone Model: 211

Project #: pJ 20122 Run: 5 Tech: MM Reviewer: DP

Pre-test Weight Record		~~SYSTEM 2~~ System 1st Hour			
		Probe & Housing Number	Front Filter Number	Back Filter Number	gaskets
Date	Time	33	806	807	20
2016-01-12	17:00	109,3608	0,1261	0,1276	10,2777
2016-01-13	9:00	109,3607	0,1260	0,1276	10,2778

Post-test Weight Record		SYSTEM 2			
		Probe & Housing Number	Front Filter Number	Back Filter Number	gaskets
Date	Time	33	806	807	20
2016-01-13	17:00	109,3611	0,1266	0,1277	10,2793
2016-01-19	8:30	109,3611	0,1265	0,1274	10,2782
2016-01-19	16:45	109,3611	0,1265	0,1274	10,2781

Rev.2 6/14/2021

Paramètres

Tous les facteurs de corrections et autres paramètres qui peuvent être modifiés par l'utilisateur du fichier sont regroupés ici.

Code verrouillage:	WOO	

Description du test

Test standard	EPA	
Run #	6	
Date	14-01-2016	
Technicien	M.M	
Project #	PI-20122	

Description de l'unité

Manufacturier	Woodstock Soapstone	
Modèle	211	
Combustion system	Cat	
Appliance type	Hybrid woodstove	
Firebox volume	2,5	cu ft.
Appliance weight empty	600	lbs
Appliance weight full	600	lbs

Paramètres du test

Logging time	1	min
Manufacturer's rated heat output	na	BTU/h Donnée fournie par le manfacturier
Targeted category	1	
Targeted output	à définir	BTU/h
Cp steel	0,1	BTU/lb-°F

Échantillonnage

Blank sampling rate	0,20	cuft/min
Internal probe diameter	0,18	in.
Calibration Factor (DGM #1):	0,996	Dimensionless
Equipment number (DGM #1):	EM-178	
Calibration Factor (DGM #2):	0,990	Dimensionless
Equipment number (DGM #2):	EM-179	
Calibration Factor (DGM #3):	1,000	
Equipment number (DGM #3):	EM-070	Dimensionless

Tunnel

Targeted tunnel flow rate	170	scfm
Tunnel diameter	6	in.
Molecular weight	29	
Pitot tube type	Standard	
Pitot tube coefficient	0,99	Dimensionless

Project nu.	PI-20122
Date	14-01-2016
Technicien	M.M

Fuel data

Fuel type	Dimension	
Fuel specie	D. Fir	
HHV	19810,0	kJ/kg
%C	48,7	
%H	6,9	
%O	43,9	
%Ash	0,5	
HHV	8519,2	Btu/lb
LHV	7451,0	Btu/lb

Default Fuel Values

	D. Fir	Oak/Maple
HHV	19 810	19 887
%C	48,73	50
%H	6,87	6,6
%O	43,9	42,9
%Ash	0,5	0,5
HHV (Btu/lb)	8519	8552
LHV (Btu/lb)	7451	7480

Data 2016-01-14 EPA PI-20122 run6

	Start	End
Barometer (kPa):	101	101
Barometer (in.Hg):	29,825289	29,825289
Dry Bulb (F):	68,18	78,08
Humidity (%):	17,6	18,7
Air velocity (ft/min)	21	22

DGM #1	Final:	12346,060	cuft	Final:	349601,490	Liter
	Initial:	12295,065	cuft	Initial:	348157,460	Liter
DGM #2	Final:	10812,742	cuft	Final:	306182,750	Liter
	Initial:	10763,670	cuft	Initial:	304793,190	Liter
DGM room				Final:	964,910	cuft
				Initial:	931,690	cuft

Numéro de la ligne dans "Raw data" à partir duquel les données du VRAI test commencent: 166

Autres données à rentrer: dans preload data, load data, traverse et filter set weight

Project nu.	PI-20122
Date	14-01-2016
Technicien	M.M

Preload data sheet

Test Load Weight:

Lower	Ideal	Upper
15,75	17,50	19,25

Load Volume: 0,4074 cu. ft

Loading Density: 5,905 lbs./ft3

Number of Spaces:

Spacer weight (lbs):

Load Density (wet): 36,234 lbs./ft3

Dry Wood Density: 30,09547

Piece Size (in): Thick	Wide	x Length	Weight lbs	Meter Moisture Content Dry Uncorrected %					Ave. MC x Weight	Volume Cubic Inches
2	4	5,5	0,65		21				13,65	44,00
2	4	5,5	0,7		20,9				14,63	44,00
2	4	5,5	0,67		20,8				13,936	44,00
2	4	5,5	0,634		19,9				12,6166	44,00
2	4	5,5	0,728		19,8				14,4144	44,00
2	4	5,5	0,64		20,1				12,864	44,00
2	4	5,5	0,644		21,8				14,0392	44,00
2	4	5,5	0,646		21,6				13,9536	44,00
2	4	5,5	0,722		20,8				15,0176	44,00
2	4	5,5	0,962		20,5				19,721	44,00
2	4	5,5	0,794		20,3				16,1182	44,00
2	4	5,5	0,854		19,9				16,9946	44,00
2	4	5,5	0,842		19,8				16,6716	44,00
2	4	5,5	0,8		19,6				15,68	44,00
2	4	5,5	0,938		20,9				19,6042	44,00
2	4	5,5	0,962		20,8				20,0096	44,00
2	4	5,5	0,936		20,6				19,2816	44,00
2	4	5,5	0,838		19,4				16,2572	44,00
2	4	5,5	0,802		19,5				15,639	44,00
										0,00
										0,00
										0,00
										0,00
								SUM MC:	301,0984	

PreTest Load Weight: 14,76 lbs.

Dry Weight: 5,56 kg.

Average Moisture Content: %

Dry: 20,40

20,40

Must be 18-28

Wet: 16,94

must be 15,2-22

Project nu.	PI-20122
Date	14-01-2016
Technicien	M.M

FUEL LOAD DATA SHEET, CSA B415

Test Load Weight:

Lower	Ideal	Upper
15,8	17,5	19,3

* For boilers, a loading density factor of 10 lb/ft3 is applied

Load Volume: 0,55 cu. ft

Loading Density: 7,0 lbs./ft3

Number of Spaces: 24

Spacer weight: lbs

Load Density (wet): 31,5 lbs./ft3

Dry Wood Density: 26,2 lbs./ft3

Piece Size (in): Thick	Wide	›Length	Weight lbs	Meter Moisture Content Dry Uncorrected %					Ave. MC x Weight	Volume Cubic Inches	Ave. MC %
1,5	3,5	16	1,51	19,50	19,50	21,50	21,00	22,90	31,5288	84,00	20,9
1,5	3,5	16	1,54	21,60	21,50	20,80	20,90	21,00	32,5864	84,00	21,2
1,5	3,5	16	1,54	21,70	22,60	21,60	21,70	21,80	33,6952	84,00	21,9
1,5	3,5	16	1,64	20,20	22,00	20,30	21,00	20,90	34,2432	84,00	20,9
3,5	3,5	16	4,45	20,00	19,10	20,50	20,30	20,50	89,356	196,00	20,1
3,5	3,5	16	4,21	19,50	19,50	21,50	20,00	21,00	85,463	196,00	20,3
1,5	0,75	5	0,11			20,10			2,1708	5,63	20,1
1,5	0,75	5	0,11			20,60			2,266	5,63	20,6
1,5	0,75	5	0,12			20,30			2,3548	5,63	20,3
1,5	0,75	5	0,11			21,00			2,352	5,63	21,0
1,5	0,75	5	0,10			21,30			2,0448	5,63	21,3
1,5	0,75	5	0,11			21,60			2,2896	5,63	21,6
1,5	0,75	5	0,11			21,30			2,343	5,63	21,3
1,5	0,75	5	0,11			21,60			2,3328	5,63	21,6
1,5	0,75	5	0,11			21,60			2,4192	5,63	21,6
1,5	0,75	5	0,11			20,00			2,16	5,63	20,0
1,5	0,75	5	0,10			19,90			1,9502	5,63	19,9
1,5	0,75	5	0,10			19,80			2,0592	5,63	19,8
1,5	0,75	5	0,11			19,60			2,2344	5,63	19,6
1,5	0,75	5	0,108			19,30			2,0844	5,63	19,3
1,5	0,75	5	0,112			19,60			2,1952	5,63	19,6
1,5	0,75	5	0,11			19,60			2,156	5,63	19,6
1,5	0,75	5	0,108			20,1			2,1708	5,63	20,1
1,5	0,75	5	0,104			20,6			2,1424	5,63	20,6
1,5	0,75	5	0,108			21			2,268	5,63	21,0
1,5	0,75	5	0,102			20,5			2,091	5,63	20,5
1,5	0,75	5	0,11			20,3			2,233	5,63	20,3
1,5	0,75	5	0,106			20,6			2,1836	5,63	20,6
1,5	0,75	5	0,102			20,3			2,0706	5,63	20,3
1,5	0,75	5	0,128			20,8			2,6624	5,63	20,8
								SUM MCx'	360,1068		20,6 %

Test Load Weight: 17,49 lbs.

Dry Weight: 6,58 kg.

Average Moisture Content: %

Dry: 20,55 Dry(EPA) 20,55

Dry(B415 20,59

20,55

Must be 19-25

Wet: 17,05

must be 15,2-22

Coal Bed Range: 3,5 lbs. to 4,4 lbs.

TEST CHARGE:

Coal bed weight: 4,2 lbs.

Project nu.	PI-20122
Date	14-01-2016
Technicien	M.M

Tunnel Traverse Worksheet (for velocity calculations)

Static Pressure:	0,27	in. H20
Barometer:	29,900	in. Hg

Pour un tunnel de 12" et plus, prendre 6 lectures

	TUNNEL VELOCITY	TUNNEL TEMP	SQUARE ROOT
	In. wc	°F	
A center			0,0000
B center			0,0000
A1			0,0000
A2			0,0000
A3			0,0000
A4			0,0000
A5			0,0000
A6			0,0000
B1			0,0000
B2			0,0000
B3			0,0000
B4			0,0000
B5			0,0000
B6			0,0000
AVERAGE	#DIV/0!	#DIV/0!	0,0000

PITOT CONSTANT=
0,946

Pour un tunnel moins de 12", prendre 4 lectures

	TUNNEL VELOCITY	TUNNEL TEMP	SQUARE ROOT
	In. wc	°F	
A center	0,064	70,17	0,2530
B center	0,063	69,99	0,2510
A1	0,054	70,49	0,2324
A2	0,062	70,5	0,2490
A3	0,068	70,14	0,2608
A4	0,058	69,7	0,2408
B1	0,054	69,910	0,2324
B2	0,060	69,870	0,2449
B3	0,062	69,530	0,2490
B4	0,056	69,100	0,2366
AVERAGE	0,0601	69,9400	0,2450

Project nu.	PI-20122
Date	14-01-2016
Technicien	M.M

SFBA EPA EMISSION RESULTS

Test Duration: **279** min

PRESSURE FACTOR:	DGM 1	0,96794	
	DGM 2	0,97472	
	DGM 3	0,99683	
TEMPERATURE FACTORS	DGM 1	0,97973	
	DGM 2	0,97856	
	DGM 3	0,98333	
VOLUMES SAMPLED	DGM 1	48,173	SCft
	DGM 2	46,340	Scft
	DGM 3	32,563	SCft

TOTAL TUNNEL VOLUME : 49290

SAMPLE RATIOS

Sample Train 1:	1023,194
Sample Train 2:	1063,656

Paticulate concentration

Sample Train 1	**0,000048**	g/dscf
Sample Train 2	**0,000052**	g/dscf
Room	**0,000003**	g/dscf

TOTAL EMISSIONS

Sample Train 1	**2,20**	g
Sample Train 2	**2,40**	g

EMISSION RATES

Sample Train 1	**0,47**	g/hr
Sample Train 2	**0,52**	g/hr
1st hour emission rate	**1,74**	g/hr

	Train 1	Train 2
Cs	4,774E-05	5,17906E-05

RESULTS

Average emission rate: 0,5 g/hr

Burn Rate : 1,415 Dry kg/hr

BAROMETRIC PRESSURE

Average:	29,825289	in Hg
Start:	29,825289	in Hg
End:	29,825289	in Hg

DGM CONTROLLER VALUES

DGM 1	Final:	12346,060	Cuft
	Initial:	12295,065	Cuft
DGM 2	Final:	10812,742	Cuft
	Initial:	10763,670	Cuft
DGM #3	Final:	964,910	Cuft
	Initial:	931,690	Cuft

TEMPERATURES

DGM 1	538,926	°R
DGM 2	539,567	°R

CALIBRATION FACTORS

DGM 1	0,9961
DGM 2	0,9901
DGM #3	1,0000

TUNNEL FLOW RATE: 176,668 Dscfm

PARTICULATE CATCH

Total Sample Train 1:	2,30	mg
Total Sample Train 2:	2,40	mg
Total Sample Train 1 1st hour:	1,70	mg

DEVIATION: 4,33%

Filter set weight

	System 1 (g) 1st hour				System 1 (g)				System 2 (g)				Ambient blank (g)	Date	Heure
	probe	front	back	gasket	probe	front	back	gasket	probe	front	back	gasket	Filter		
Number	37	412	413	32	30	234	408	31	12	216	233	30	811		
Before (1)															
Before (2)															
Before (3)															
Before (4)															
Before (5)	107,9713	0,1281	0,1256	3,3153	110,2387	0,1261	0,1262	3,3091	94,5428	0,1248	0,1257	4,3150	0,1273	2016-01-13	17:00
Before (6)	107,9714	0,1280	0,1256	3,3154	110,2387	0,1262	0,1262	3,3092	94,5429	0,1249	0,1255	4,3151	0,1274	2016-01-14	09:00
After (1)	107,9718	0,1291	0,1256	3,3168	110,2389	0,1266	0,1264	3,3104	94,5443	0,1257	0,1257	4,3165	0,1275	2016-01-14	16:30
After (2)	107,9716	0,1289	0,1254	3,3163	110,2388	0,1263	0,1263	3,3095	94,5442	0,1254	0,1255	4,3157	0,1275	2016-01-19	09:00
After (3)	107,9716	0,1289	0,1254	3,3162	110,2388	0,1263	0,1263	3,3095	94,5442	0,1254	0,1255	4,3157	0,1275	2016-01-19	17:00
After (4)															
After (5)															
After (6)	107,9716	0,1289	0,1254	3,3162	110,2388	0,1263	0,1263	3,3095	94,5442	0,1254	0,1255	4,3157	0,1275	2016-01-19	17:00
Difference	0,0002	0,0009	-0,0002	0,0008	0,0001	0,0001	0,0001	0,0003	0,0013	0,0005	0,0000	0,0006	0,0001		
Total (mg)		1,7				2,3				2,4			0,1		
Total ajusté (mg)		**1,60**				**2,20**				**2,30**					

"All components of the filter catch are dessicated and weighed before and after each test.
Small PM 2.5 catches may result in negative numbers, because, for example, a small piece of the filter might get stuck to the gasket.
Since all components are dessicated and weighed, we certify that the total weight is accurate. No chemicals or solvents are used to remove PM from the components.

Project nu.	PI-20122
Date	14-01-2016
Technicien	M.M

Data 2016-01-14 EPA PI-20122 run6

Manufacturer: Woodstock Soapstone
Model: 211

Run: 6
Project #: PI-20122
Test Duration: 279 min

	HHV	LHV
Eff	74,79%	80,83%
Comb Eff	99,50%	99,50%
HT Eff	75,16%	81,24%
Output	20 973	kJ/h
Burn Rate	1,42	kg/h
Grams CO	14	g
Input	28 044	kJ/h
MC wet	17,05	

Note: In the "Input data", "Calc. % O_2", "Fuel Properties", and "Mass Balance" columns, [e], [d], [g], [a]. [b], [c], [h], [u], [w], [j], and [k] refer to their respective variables in Clauses 13.7.3

	Ultimate CO_2
$CO_{2\text{-ult}}$	19,64
	F_0
	1,060

Overall Heating Efficiency:	74,79%	
Combustion Efficiency:	99,50%	
Heat Transfer Efficiency:	75,16%	

	Air Fuel Ratio (A/F)
Dry Molecular Weight (M_d)	29,63
Dry Moles Exhaust Gas (N_f):	555,90
Air Fuel Ratio (A/F)	15,96

Heat Output:	19 895 Btu/h	20 973 kJ/h
Heat Input:	26 602 Btu/h	28 044 kJ/h
Burn Duration:	4,65 h	
Burn Rate:	3,12 lb/h	1,416 kg/h
Stack Temp:	317,3 Deg. F	158,5 Deg. C

POLYTESTS
TESTING THROUGH YOUR REALITY

Date: 2016 01 14 Manufacturer: Wood stock soapstone Model: 211
Project #: pI 20122 Run: 6 Tech: M.A. Reviewer: DP

kindling + preload 15,34 LBS START FIRE
- At 15,2 LBS close by pass clips on pour la porte
- At 10,4 LBS close air inlet
- At 6,6 LBS Brasser Feux Maintenir Ver Million
- At 5,27 LBS Brassed Feux
- At 4,2 LBS insert load (1:21)
- At 1 minute close air inlet (3,1)
- At 2, 3 minute 30s Ouvre air inlet (4)
- At 4 minute close air inlet (2)

4240

TEST LOAD CONFIGURATION

POLYTESTS
TESTING THROUGH YOUR REALITY

Date:_____ Manufacturer:_____ Model:_____

Project #: _____ Run:_____ Tech:_____ Reviewer:_____

Side view	Front view	Top view

Rev.2 6/14/2021

POLYTESTS
TESTING THROUGH YOUR REALITY

Date:_____ Manufacturer:_____ Model:_____

Project #: _____ Run:_____ Tech:_____ Reviewer:_____

	ADDITION		SUBSTRACTION	
	ft3	Volume	ft3	Volume
V measure				
V ashlip				
%				
V usable				

Usable Firebox:_____

Test load weight:_____ Minimum:_____ Maximum:_____

Déviation:_____

POLYTESTS
TESTING THROUGH YOUR REALITY

PRE / POST CHECKS

Date: 2016-01-14 Manufacturer: Wood Stock Soapstone Model: 211
Project #: PI 20122 Run: 6 Tech: MM Reviewer: DD

Moisture Meter Calibration Check:

Equipment #	Time	12%	22%
EM-191	2200	ok	ok

	Pre-Test	Post-Test
Facility Conditions:		
Air Velocity from less than 2 feet	21 (max50 Fpm)	22 (max50 Fpm)
Smoke Capture Check	ok	ok
Picture (4 sides)	ok	ok
Wood Heater Conditions:		
Date Wood Heater Stack Cleaned	2016-01-04	
Date Dilution Tunnel Cleaned	2016-01-04	
Induced Draft Check (max 0.005 H2O)	ok	
Traverse before ignition	ok	
Flow Rate 140 cfm ±10%		ok
Temperature System:		
Ambient (65°-90°F)		ok °F
Wood Heater Surface (±125°F)		ok °F
Proportional Checks:		
Thermocouple check	ok	
Pitot Clean	ok	
Pitot verification	ok	

Sampling Train ID Numbers:	Train 1st hour	Train 1	Train 2
Probe	12	30	~~23~~ 37 mm
Filter Front	216	234	412
Filter Back	233	408	413
Filter Thermocouple	11	11	12
Filter (<90°F)	ok	ok	ok

Rev.2 6/14/2021

POLYTESTS
TESTING THROUGH YOUR REALITY

SAMPLING EQUIPMENT CHECK OUT

Date: 2016-01-14 Manufacturer: Woodstock soapstone Model: 211

Project #: pJ 20122 Run: 6 Tech: M.M. Reviewer: DP

Leakage Checks Tunnel Samplers

	System 1st hour		System 1		System 2	
Unplugged Flow Rate = .25cfm	Pre-Test ASTM (-15) CSA B415 (-5)	Post-Test (max test)	Pre-Test ASTM (-15) CSA B415 (-5)	Post-Test (Max test)	Pre-Test ASTM (-15) CSA B415 (-5)	Post-Test (Max test)
Vacuum (inches Hg.)	-15	-15	-15	-15	-15	-15
Final 1minute DGM (Liter)	348157,30	349602,21	348157,37	349602,26	304792,64	306183,50
Initial 1minute DGM (Liter)	348157,30	349602,20	348157,37	349602,25	304792,64	306183,50
Change © (Liter)	Ø	0,01	Ø	0,01	Ø	Ø
Allowable leakage .04 x Sample rate or 0.28Lpm CSA B415 (0.56)						
Check OK	ok	ok	ok	ok	ok	ok

Leakage Checks Flue Gas Sampler

Plugged Probe	Pre Test	Post Test
Vacuum (inches Hg.)	-5	-5
Rotometer Reading (mml/min.)	0	0
Flow Rate (lpm)	1.5	1.5
Allowable (.02 x Sample Rate)	30	30
Check OK	ok	ok

Leakage Checks Pitot

Plugged Probe	Pre Test 3 H2o static	Pre Test 0.4-0.5 H2o velocity	Post Test 3 H2o Static	Post Test 0.4-0.5 H2o velocity
Vacuum (inches Hg.)	3	.4	3	.5
Check OK (no change after 15 sec.)	ok	ok	ok	ok

POLYTESTS
TESTING THROUGH YOUR REALITY

PRE-TEST SCALE AUDIT

Date: 2016-01-14 Manufacturer: Wood Stock Soapstone Model: 2N
Project #: pI 20122 Run: 6 Tech: MM Reviewer: DP

Scale Type	Audit		Measured Weight
	Equipment #	Weight	
Platform	EM-090	4,4 lbs, Class F	4,4 lbs
Wood	EM-090	4,4 lbs, Class F	4,4 lbs
Analytical	EM-128	100 mg, Class S	100 mg
Analytical	EM-129	200 g, Class S	200 g

LIMITS OF WEIGHT RANGES

ANALYTICAL SCALE: ..... 50%-150% of dry filter weight, ± 0.1 mg
PLATFORM SCALE..... 20%-80% of ideal test load weight, ± 0.1 lbs or 1%
WOOD SCALE ..... 20%-80% of ideal test load weight, ± 0.01 lbs or 1%

POLYTESTS
TESTING THROUGH YOUR REALITY

CONTINUOUS ANALYZERS

Date: 2016-01-14 Manufacturer: Woodstock soapstone Model: 211
Project #: pt 20122 Run: 6 Tech: MM Reviewer: DP

FOR TUNNELS < 12 in

Barometric pressure (P_{bar}) 101 (KPa.) Static pressure (P_q) 0,27 (inches w.c.)
Inside diameter: Port A _____ Port B ____.
Tunnel cross sectional area: .1963Ft^2
Pitot tube type: Standard

Traverse Point	Position (inches)			Velocity Head Δ_p (inches H_2O)	Tunnel Temperature (°F)
	6 po	7 po	8 po		
A- Centroid	3.00	3.50	4	0,064	70,17
B - Centroid	3.00	3.50	4	0,063	69,99
A-1	0.40	0.50	0.50	0,054	70,49
A-2	1.50	1.75	2	0,062	70,50
A-3	4.50	5.25	6	0,068	70,14
A-4	5.60	6.5	7.5	0,058	69,70
B-1	0.40	0.50	0.50	0,054	69,91
B-2	1.50	1.75	2	0,060	69,87
B-3	4.50	5.25	6	0,062	69,53
B-4	5.60	6.5	7.5	0,056	69,10
				AVERAGE	

$$v_s = K_p C_p (\sqrt{\Delta p})_{avg} \sqrt{\frac{(T_s)_{avg}}{P_s M_s}}$$

Where,
C_p = pitot tube coefficient, dimension less = 0.99 for standard pitot.
Δ_p = manometer reading (inches H_2O)
T_s = average absolute dilution tunnel temperature (°F + 460)
P_s = absolute dilution tunnel gas pressure or $P_{bar} + P_{qg}$
P_q = static pressure $\frac{\text{in. } H_2O}{\{\ 13.6\ \}}$
M_s = 28.56, wet molecular weight of stack gas (alternatively, it may be measured)
K_p = 85.49 pitot tube constant, (conversion factor for English units)

_$\Delta_p$avg. = average of the square roots of the velocity heads (Δ_p) measured at each traverse point.

POLYTESTS
TESTING THROUGH YOUR REALITY

CONTINUOUS ANALYZERS

Date: 2016-01-14 Manufacturer: Woodstock soapstone Model: 211
Project #: PI 20122 Run: 6 Tech: M.M Reviewer: DO

Pre-Test (Adjust and Record)

	ZERO		SPAN		CAL. (Record Only)	
CO	0	0	2,972	2,931	1,003	1,00
Tolerance CO		+/- 0.02		+/- 0.15		+/- 0.05
CO_2	0	0	17,93	17,82	9,76	10,00
Tolerance CO2		+/- 0.02		+/- 0.5		+/- 0.5
O_2 informative CSA B415 calculated value	na	na	na	na	na	na
	Actual	Should Be	Actual	Should Be	Actual	Should Be

Post Test (Record Only)

	Zero	Span	Cal.	Zero Drift	Limit	Span Drift	Limit	Cal. Drift	Limit	OK?	Not OK*
CO	0,002	2,968	1,013	0,002	0.02	0,004	0.15	0,010	0.05	✓	
CO_2	0,02	17,84	9,73	0,02	0.02	0,03	0.5	0,04	0.5	✓	
O_2	na	na	na	N.D	na	N.D	na	N.D	na	N.D	M

POLYTESTS
TESTING THROUGH YOUR REALITY

TEST DATA LOG

Date: 2016-01-14 Manufacturer: Woodstock soapstone Model: Z11
Project #: pZ 20122 Run: 6 Tech: MM Reviewer: BP

RAW DRY GAS METER READINGS

	System 1	System 2	Blanck
Final (Liter)	349601,49	306182,75	964,91
Initial (Liter)	348157,46	304793,19	931,69

AMBIENT CONDITIONS

	Before	After
Barometer (kPa):	101	101
Dry Bulb (F):	68,18	78,08
Humidity (%):	17,6	18,7

Flow Meter

	Before	After
Flow meter reading	N.A	N.A

Flow Meter Verification

	Before	After
Flow meter Check (liters)	N.A	N.A
Scale Weight (Kg)	N.A	N.A

POLYTESTS
TESTING THROUGH YOUR REALITY

FUEL DATA

Date: 2016-01-14 Manufacturer: woodstock soapstone Model: 211
Project #: PT 20122 Run: 6 Tech: MM Reviewer: DP

FUEL DESCRIPTION:

Type of wood:

PRE-TEST LOAD

Piece Size	Weight		Meter Moisture Content (% dry)*				
2 x 4 x 5 1/4 in.	0.65	lbs.			21		
2 x 4 x 5 1/4 in.	0.70	lbs.			20.9		
2 x 4 x 5 1/4 in.	0.67	lbs.			20.8		
2 x 4 x 5 1/4 in.	0.634	lbs.			19.9		
2 x 4 x 5 1/4 in.	0.728	lbs.			19.8		
2 x 4 x 5 1/4 in.	0.64	lbs.			20.1		
2 x 4 x 5 1/4 in.	0.644	lbs.			21.8		
2 x 4 x 5 1/4 in.	0.646	lbs.			21.6		
2 x 4 x 5 1/4 in.	0.722	lbs.			20.8		
2 x 4 x 6.5 in.	0.962	lbs.			20.5		
2 x 4 x 6.5 in.	0.794	lbs.			20.3		
2 x 4 x 6.5 in.	0.854	lbs.			19.9		
2 x 4 x 6.5 in.	0.842	lbs.			19.8		
2 x 4 x 6.5 in.	0.800	lbs.			19.6		
2 x 4 x 6.5 in.	0.938	lbs.			20.9		
2 x 4 x 6.5 in.	0.962	lbs.			20.8		
2 x 4 x 6.5 in.	0.936	lbs.			20.6		
2 x 4 x 6.5 in.	0.838	lbs.			19.9		
2 x 4 x 6.5 in.	0.802	lbs.			19.5		
x x in.		lbs.					
x x in.		lbs.					
x x in.		lbs.					
x x in.		lbs.					

TEST LOAD WEIGHT: 14.73 lbs

Rev.2 6/14/2021

POLYTESTS
TESTING THROUGH YOUR REALITY

FUEL DATA

Date: 2016-01-14 Manufacturer: Woodstock Soapstone Model: 211

Project #: PL 20122 Run: 6 Tech: MM Reviewer: DP

FUEL DESCRIPTION:

Type of wood :

TEST LOAD

Piece Size	Weight		Meter Moisture Content (% dry)*				
1 1/2 x 3 1/2 x 16 in.	1,51	lbs.	19,5	19,5	21,5	21,0	22,9
1 1/2 x 3 1/2 x 16 in.	1,54	lbs.	21,6	21,5	20,8	20,9	21,0
1 1/2 x 3 1/2 x 16 in.	1,54	lbs.	21,7	22,6	21,6	21,7	21,8
1 1/2 x 3 1/2 x 16 in.	1,64	lbs.	20,2	22	20,3	21,0	22,9
3 1/2 x 3 1/2 x 16 in.	4,45	lbs.	20,0	19,1	20,5	20,3	20,5
3 1/2 x 3 1/2 x 16 in.	4,21	lbs.	19,5	19,5	21,5	20,0	21,0
1,5 x 3/4 x 5 in.	0,108	lbs.			20,1		
1,5 x 3/4 x 5 in.	0,11	lbs.			20,6		
1,5 x 3/4 x 5 in.	0,116	lbs.			20,3		
1,5 x 3/4 x 5 in.	0,112	lbs.			21,0		
1,5 x 3/4 x 5 in.	0,096	lbs.			21,3		
1,5 x 3/4 x 5 in.	0,106	lbs.			21,6		
1,5 x 3/4 x 5 in.	0,110	lbs.			21,3		
1,5 x 3/4 x 5 in.	0,108	lbs.			21,6		
1,5 x 3/4 x 5 in.	0,112	lbs.			21,6		
1,5 x 3/4 x 5 in.	0,108	lbs.			20,0		
1,5 x 3/4 x 5 in.	0,098	lbs.			19,9		
1,5 x 3/4 x 5 in.	0,104	lbs.			19,8		
1,5 x 3/4 x 5 in.	0,114	lbs.			19,6		
1,5 x 3/4 x 5 in.	0,108	lbs.			19,3		
1,5 x 3/4 x 5 in.	0,112	lbs.			19,6		
1,5 x 3/4 x 5 in.	0,11	lbs.			19,6		
1,5 x 3/4 x 5 in.	0,108	lbs.			20,1		
1,5 x 3/4 x 5 in.	0,104	lbs.			20,6		
1,5 x 3/4 x 5 in.	0,108	lbs.			21,0		
1,5 x 3/4 x 5 in.	0,102	lbs.			20,5		
1,5 x 3/4 x 5 in.	0,11	lbs.			20,3		

TEST LOAD WEIGHT: _____ lbs Min 20%:..... Max 25%:_____

POLYTESTS
TESTING THROUGH YOUR REALITY

FUEL DATA

Date: 2016-01-14 Manufacturer: Woodstock Soapstone Model: 211
Project #: PT 20122 Run: 6 Tech: M.M. Reviewer: DP

FUEL DESCRIPTION:
Type of wood : Suite

TEST LOAD

Piece Size	Weight	Meter Moisture Content (% dry)*				
1,5 x 3/4 x 5 in.	0,106 lbs.			20,6		
1,5 x 3/4 x 5 in.	0,102 lbs.			20,3		
1,5 x 3/4 x 5 in.	0,108 lbs.			20,8		
x x in.	lbs.					
x x in.	lbs.					
x x in.	lbs.					
x x in.	lbs.					
x x in.	lbs.					
x x in.	lbs.					
x x in.	lbs.					
x x in.	lbs.					
x x in.	lbs.					
x x in.	lbs.					
x x in.	lbs.					
x x in.	lbs.					
x x in.	lbs.					
x x in.	lbs.					
x x in.	lbs.					
x x in.	lbs.					
x x in.	lbs.					
x x in.	lbs.					
x x in.	lbs.					
x x in.	lbs.					
x x in.	lbs.					
x x in.	lbs.					
x x in.	lbs.					
x x in.	lbs.					

TEST LOAD WEIGHT: 17,49 lbs Min 20%: 3,50 Max 25%: 4,37

POLYTESTS
TESTING THROUGH YOUR REALITY

DILUTION TUNNEL PARTICULATE SAMPLER DATA

Date: 2016-01-13 Manufacturer: Woodstock Soapstone Model: 211

Project #: pI 20122 Run: 6 Tech: MM Reviewer: DP

Rev.2 6/14/2021

Pre-test Weight Record		~~SYSTEM 1~~ – 1st hour System 2				SYSTEM 1				
		Probe & Housing Number	Front Filter Number	Back Filter Number	gaskets	Probe & Housing Number	Front Filter Number	Back Filter Number	gaskets	Blanck
Date	Time	12	216	233	30	30	234	408	31	811
2016-01-13	17:00	94,5428	0,1248	0,1257	4,3150	110,2387	0,1261	0,1262	3,3091	0,1273
2016-01-14	9:00	94,5429	0,1249	0,1255	4,3151	110,2387	0,1262	0,1262	3,3092	0,1274

Post-test Weight Record		SYSTEM 1 – 1st hour				SYSTEM 1				
		Probe & Housing Number	Front Filter Number	Back Filter Number	gaskets	Probe & Housing Number	Front Filter Number	Back Filter Number	gaskets	Blanck
Date	Time	12	216	233	30	30	234	408	31	811
2016-01-14	16:30	94,5443	0,1257	0,1257	4,3165	110,2389	0,1266	0,1264	3,3104	0,1275
2016-01-19	9:00	94,5442	0,1254	0,1255	4,3157	110,2388	0,1263	0,1263	3,3095	0,1275
2016-01-19	17:00	94,5442	0,1254	0,1255	4,3157	110,2388	0,1263	0,1263	3,3095	0,1275

POLYTESTS
TESTING THROUGH YOUR REALITY

DILUTION TUNNEL PARTICULATE SAMPLER DATA

Date: 2016-01-13 Manufacturer: Woodstock Soapstone Model: 211

Project #: PT 20122 Run: 6 Tech: MM Reviewer: DP

		~~SYSTEM 2~~ 1st Hour DP			
Pre-test Weight Record		Probe & Housing Number	Front Filter Number	Back Filter Number	gaskets
Date	Time	37	412	413	32
2016-01-13	17:00	107,9713	0,1281	0,1256	3,3153
2016-01-14	9:00	107,9714	0,1280	0,1256	3,3154

		SYSTEM 2			
Post-test Weight Record		Probe & Housing Number	Front Filter Number	Back Filter Number	gaskets
Date	Time	37	412	413	32
2016-01-14	16:30	107,9718	0,1291	0,1256	3,3168
2016-01-19	9:00	107,9716	0,1289	0,1254	3,3163
2016-01-19	17:00	107,9716	0,1289	0,1254	3,3162

Rev.2 6/14/2021

APPENDIX 2: Proportionality results

Average	Average	Average						Average
17,37	Inlet +	Inlet +						0,269
	Outlet	Outlet	Average	Average	#1	#2		
Tunnel	Temp.	Temp.	100,67	99,88	System 1	System 2		SQRT
Velocity	Meter 1	Meter 2	**Proportional Rates**		Vol.Std.	Vol.Std.		Delta-P
			PR1	**PR2**			Time	
Ft/Sec	Deg. R	Deg. R	**%**	**%**	(ft3)	(ft3)	min	(in H2O)2
17,366	531,5	531,8			0,174	0,167	0	0,2686627
17,403	531,5	531,9	97,97	96,99	0,174	0,167	1	0,2731668
17,241	531,5	531,9	98,84	97,37	0,175	0,167	2	0,2713025
17,481	531,5	531,9	96,79	96,23	0,175	0,167	3	0,2753896
17,347	531,5	531,9	98,07	97,44	0,174	0,168	4	0,2727956
17,443	531,6	532,0	97,37	96,51	0,174	0,167	5	0,2740955
17,140	531,6	532,0	99,55	98,80	0,174	0,167	6	0,2690481
17,137	531,6	532,0	99,71	98,99	0,174	0,167	7	0,2686705
17,191	531,6	532,0	99,63	99,32	0,174	0,168	8	0,2690486
17,170	531,6	532,1	100,22	99,72	0,174	0,168	9	0,2682929
17,100	531,6	532,1	101,01	100,34	0,174	0,168	10	0,2667741
17,102	531,7	532,2	101,64	100,99	0,174	0,168	11	0,266043
17,081	531,8	532,2	101,97	101,44	0,174	0,168	12	0,2650433
17,120	531,9	532,3	102,52	101,79	0,174	0,168	13	0,2649747
17,197	531,9	532,4	102,28	101,73	0,174	0,167	14	0,2654392
17,268	532,0	532,4	102,18	101,42	0,174	0,167	15	0,2660126
17,169	532,1	532,5	103,45	102,38	0,174	0,167	16	0,2640968
17,227	532,1	532,6	103,38	103,15	0,174	0,168	17	0,2644813
17,385	532,1	532,7	103,05	102,27	0,174	0,168	18	0,2663927
17,325	532,2	532,7	103,63	102,53	0,174	0,167	19	0,2650562
17,299	532,4	532,8	103,93	102,94	0,174	0,167	20	0,2644807
17,284	532,5	532,9	103,88	103,23	0,174	0,167	21	0,2640965
17,352	532,6	533,0	103,69	102,71	0,174	0,167	22	0,2650566
17,177	532,6	533,1	104,75	103,77	0,174	0,167	23	0,262172
17,342	532,6	533,2	104,01	103,53	0,174	0,167	24	0,2644819
17,193	532,7	533,2	105,02	104,37	0,174	0,168	25	0,2621686
17,273	532,8	533,3	104,37	103,86	0,174	0,167	26	0,2631349
17,334	532,9	533,4	104,39	103,89	0,174	0,167	27	0,2637127
17,339	533,0	533,5	104,23	103,61	0,174	0,167	28	0,2637125
17,353	533,2	533,6	104,13	103,27	0,173	0,167	29	0,2640974
17,397	533,2	533,7	103,89	103,04	0,174	0,167	30	0,2650563
17,296	533,3	533,7	104,23	103,37	0,174	0,167	31	0,2637134
17,372	533,3	533,8	103,69	102,95	0,174	0,167	32	0,2650567
17,388	533,4	533,9	103,31	102,84	0,174	0,167	33	0,2654398
17,318	533,4	534,0	103,74	102,89	0,174	0,167	34	0,2644832
17,286	533,5	534,0	103,70	102,55	0,174	0,167	35	0,2640975
17,365	533,6	534,1	103,01	102,27	0,173	0,166	36	0,2654398
17,362	533,8	534,2	103,34	102,50	0,174	0,167	37	0,2654412
17,381	533,9	534,3	102,87	102,02	0,174	0,167	38	0,2660139
17,397	533,9	534,4	102,94	101,84	0,174	0,167	39	0,2663947
17,360	534,0	534,5	102,47	101,82	0,174	0,167	40	0,2660141
17,285	534,0	534,5	102,88	101,90	0,173	0,166	41	0,265057
17,365	534,1	534,6	102,10	101,37	0,173	0,166	42	0,2663948
17,292	534,1	534,7	102,76	101,77	0,173	0,166	43	0,2654409
17,416	534,1	534,7	102,34	100,79	0,174	0,166	44	0,2673513
17,327	534,2	534,8	102,33	101,63	0,174	0,166	45	0,266014
17,410	534,4	534,9	101,94	100,86	0,173	0,166	46	0,2673376
17,458	534,5	535,0	101,45	101,01	0,174	0,167	47	0,2682947
17,258	534,5	535,1	102,23	101,65	0,173	0,167	48	0,2654419
17,188	534,5	535,1	102,33	102,03	0,173	0,167	49	0,2644838
17,354	534,6	535,2	101,53	100,28	0,173	0,166	50	0,2673465
17,222	534,7	535,2	102,14	101,47	0,173	0,166	51	0,2654417
17,333	534,7	535,3	101,66	100,63	0,174	0,167	52	0,2673467
17,652	534,7	535,3	99,97	98,49	0,174	0,166	53	0,2721341
17,320	534,8	535,4	101,22	100,31	0,174	0,166	54	0,2673466
17,434	535,0	535,4	100,54	99,65	0,173	0,166	55	0,2690509
17,481	535,1	535,6	99,94	99,04	0,173	0,166	56	0,269993
17,418	535,0	535,5	100,22	99,54	0,173	0,166	57	0,2690509
17,295	534,9	535,6	100,89	100,26	0,173	0,166	58	0,2673468
17,371	534,9	535,6	100,56	99,55	0,173	0,166	59	0,2686561
17,484	534,9	535,6	99,91	99,02	0,173	0,166	60	0,2705567

17,274	535,0	535,6	101,01	100,09	0,173	0,166	61	0,2673472
17,387	535,0	535,7	100,24	99,37	0,173	0,166	62	0,2690517
17,381	535,1	535,7	100,20	99,07	0,173	0,166	63	0,2690522
17,444	535,2	535,8	99,84	98,87	0,173	0,166	64	0,2699931
17,493	535,3	535,8	99,42	98,56	0,173	0,166	65	0,270932
17,359	535,3	535,9	100,48	99,23	0,173	0,166	66	0,2690517
17,419	535,2	535,9	99,64	99,11	0,173	0,166	67	0,2699933
17,209	535,2	535,9	101,04	100,22	0,173	0,166	68	0,2667773
17,234	535,2	535,9	100,44	100,10	0,173	0,167	69	0,2673474
17,482	535,2	535,9	99,18	98,12	0,173	0,166	70	0,2713067
17,483	535,1	535,9	99,10	98,89	0,173	0,167	71	0,2713047
17,443	535,2	535,9	99,29	98,52	0,173	0,167	72	0,270586
17,483	535,3	535,9	99,11	98,34	0,173	0,166	73	0,2713067
17,432	535,3	535,9	99,43	98,54	0,173	0,166	74	0,2705569
17,477	535,3	535,9	99,20	98,47	0,173	0,166	75	0,2713068
17,447	535,3	536,0	99,02	98,50	0,173	0,166	76	0,2709319
17,425	535,3	536,0	99,44	98,81	0,173	0,167	77	0,2705567
17,499	535,3	536,0	98,60	97,86	0,173	0,166	78	0,2718671
17,431	535,3	536,0	98,83	98,27	0,173	0,166	79	0,270932
17,364	535,2	536,0	99,51	98,64	0,173	0,166	80	0,2699935
17,361	535,3	536,0	99,37	98,46	0,173	0,166	81	0,2700008
17,649	535,3	536,0	97,97	97,25	0,173	0,166	82	0,2744697
17,562	535,3	536,0	98,32	97,62	0,173	0,167	83	0,2731713
17,501	535,4	536,0	98,67	98,21	0,173	0,167	84	0,2722413
17,555	535,5	536,1	98,07	97,23	0,173	0,166	85	0,2731714
17,405	535,4	536,1	99,02	97,89	0,173	0,166	86	0,2709321
17,418	535,4	536,1	98,67	97,91	0,173	0,166	87	0,2713071
17,365	535,5	536,1	98,99	98,29	0,173	0,166	88	0,2705579
17,498	535,5	536,1	98,22	97,35	0,173	0,166	89	0,2728011
17,379	535,5	536,1	98,69	98,21	0,173	0,166	90	0,2709329
17,371	535,4	536,0	98,47	97,96	0,173	0,166	91	0,2709323
17,669	535,3	536,0	97,26	96,36	0,173	0,166	92	0,275393
17,575	535,3	536,0	97,55	96,94	0,173	0,166	93	0,2740996
17,597	535,3	536,0	97,53	96,67	0,173	0,166	94	0,2744702
17,301	535,4	536,0	99,19	97,95	0,173	0,166	95	0,2699942
17,499	535,4	536,1	97,91	97,05	0,173	0,166	96	0,2731726
17,439	535,4	536,1	98,24	97,41	0,173	0,166	97	0,2722414
17,373	535,5	536,1	98,43	98,16	0,173	0,167	98	0,2713073
17,431	535,4	536,1	98,18	97,37	0,173	0,167	99	0,2722417
17,407	535,4	536,1	98,24	97,36	0,173	0,166	100	0,2718678
17,314	535,3	536,1	98,76	97,52	0,173	0,166	101	0,2705582
17,444	535,3	536,1	97,76	97,07	0,173	0,166	102	0,27255
17,615	535,4	536,0	96,84	95,80	0,173	0,166	103	0,2753935
17,410	535,4	536,0	97,94	97,39	0,173	0,166	104	0,2722415
17,564	535,5	536,1	97,27	96,65	0,173	0,166	105	0,2744711

Average	Average	Average						Average
15,72	Inlet +	Inlet +						0,248
	Outlet	Outlet	Average	Average	#1	#2		
Tunnel	Temp.	Temp.	99,36	100,30	System 1	System 2		SQRT
Velocity	Meter 1	Meter 2	**Proportional Rates**		Vol.Std.	Vol.Std.		Delta-P
			PR1	**PR2**			Time	
Ft/Sec	Deg. R	Deg. R	**%**	**%**	(ft3)	(ft3)	min	(in H2O)2
15,237	533,3	533,8			0,174	0,169	0	0,2326304
14,978	533,4	533,8	111,10	112,14	0,174	0,169	1	0,2293608
15,686	533,4	533,8	105,14	105,25	0,174	0,168	2	0,2418246
15,432	533,5	533,8	105,48	106,27	0,174	0,168	3	0,2388701
15,762	533,5	533,9	103,52	104,39	0,174	0,168	4	0,2439145
15,752	533,6	533,9	103,13	104,36	0,174	0,169	5	0,2439143
15,780	533,5	533,9	100,32	101,62	0,174	0,169	6	0,2478352
15,842	533,5	533,9	98,98	100,07	0,174	0,169	7	0,2498734
15,772	533,6	533,9	98,92	100,04	0,174	0,169	8	0,249264
15,884	533,5	533,9	98,17	98,91	0,174	0,168	9	0,2512915
15,841	533,5	533,9	98,29	98,89	0,174	0,168	10	0,2508872
15,892	533,5	534,0	98,03	98,98	0,174	0,169	11	0,2516956
15,858	533,6	534,0	97,85	98,93	0,174	0,169	12	0,2512928
15,793	533,6	534,0	98,50	99,57	0,174	0,169	13	0,2502807
15,832	533,6	534,0	97,95	99,04	0,174	0,169	14	0,2508877
15,829	533,6	534,0	97,87	99,15	0,173	0,169	15	0,2508878
15,824	533,6	534,1	98,20	98,76	0,174	0,168	16	0,2508875
15,718	533,6	534,1	98,72	99,61	0,174	0,168	17	0,2492642
15,839	533,6	534,1	98,09	98,86	0,174	0,169	18	0,2512923
15,782	533,6	534,0	98,44	99,21	0,174	0,169	19	0,2502807
15,821	533,6	534,1	98,24	99,13	0,174	0,169	20	0,2508876
15,781	533,7	534,1	98,23	99,27	0,174	0,169	21	0,2502808
15,873	533,7	534,1	97,86	98,67	0,174	0,169	22	0,2516954
15,825	533,7	534,2	98,04	99,04	0,174	0,169	23	0,250888
15,824	533,7	534,2	98,16	98,62	0,174	0,168	24	0,2508452
15,796	533,7	534,2	98,38	99,01	0,174	0,168	25	0,2504405
15,719	533,7	534,2	98,50	99,42	0,174	0,168	26	0,2492648
15,875	533,7	534,2	97,69	98,91	0,174	0,169	27	0,2516953
15,788	533,7	534,2	98,10	99,12	0,173	0,169	28	0,2502806
15,918	533,8	534,2	97,46	98,35	0,173	0,168	29	0,2522993
15,791	533,8	534,3	98,48	99,32	0,174	0,168	30	0,2502807
15,858	533,9	534,3	98,00	98,68	0,174	0,168	31	0,2512922
15,722	533,8	534,3	98,82	99,34	0,174	0,168	32	0,2492644
15,729	533,9	534,3	98,70	99,50	0,174	0,168	33	0,2492644
15,790	533,9	534,3	98,39	99,12	0,174	0,168	34	0,2502811
15,919	533,9	534,3	97,48	98,43	0,174	0,168	35	0,2522995
15,772	533,9	534,3	98,37	99,42	0,174	0,168	36	0,2498746
15,988	533,8	534,3	97,40	98,17	0,174	0,169	37	0,2533028
15,833	533,8	534,3	98,21	98,65	0,174	0,168	38	0,2508882
15,842	533,9	534,3	98,53	99,17	0,174	0,168	39	0,2508875
15,778	533,9	534,4	98,40	99,63	0,174	0,169	40	0,2498751
15,692	534,0	534,4	99,11	99,77	0,174	0,168	41	0,2484491
15,845	533,9	534,4	97,93	99,24	0,173	0,168	42	0,2508877
15,787	534,0	534,5	98,71	99,71	0,174	0,169	43	0,2498744
15,793	534,0	534,5	99,05	99,11	0,174	0,168	44	0,2498745
15,816	534,0	534,5	98,40	99,23	0,174	0,168	45	0,2502808
15,900	534,0	534,5	97,98	98,14	0,174	0,168	46	0,251695
15,910	534,1	534,5	98,01	98,75	0,174	0,168	47	0,2516953
15,908	534,1	534,6	97,77	98,68	0,174	0,168	48	0,2516954
15,751	534,2	534,6	98,48	99,83	0,173	0,168	49	0,2492646
15,702	534,2	534,7	99,23	100,37	0,173	0,169	50	0,2484487
15,852	534,2	534,6	98,19	99,34	0,174	0,169	51	0,2508872
15,632	534,2	534,7	99,87	100,72	0,174	0,169	52	0,2474251
15,625	534,2	534,7	99,88	100,38	0,174	0,169	53	0,2474252
15,629	534,2	534,7	99,52	100,26	0,174	0,168	54	0,2474247
15,558	534,2	534,7	99,86	100,66	0,174	0,168	55	0,2463984
15,779	534,2	534,7	98,34	99,67	0,173	0,168	56	0,2498741
15,465	534,3	534,7	100,21	101,72	0,173	0,169	57	0,2449518
15,651	534,3	534,8	99,14	100,33	0,173	0,169	58	0,2478351
15,744	534,4	534,8	98,79	99,63	0,173	0,168	59	0,2492648
15,630	534,4	534,9	99,65	100,29	0,174	0,168	60	0,2474251

15,750	534,4	534,9	98,87	99,72	0,174	0,168	61	0,2492641
15,529	534,4	534,9	100,13	101,06	0,174	0,168	62	0,2457797
15,851	534,4	534,9	98,08	99,08	0,173	0,168	63	0,2508878
15,631	534,4	534,9	99,44	100,43	0,173	0,168	64	0,2474256
15,528	534,4	534,9	100,13	101,14	0,173	0,168	65	0,2457792
15,647	534,4	535,0	100,00	100,24	0,174	0,168	66	0,2474254
15,811	534,5	535,0	98,57	99,47	0,174	0,168	67	0,2498745
15,633	534,5	535,0	100,09	100,83	0,173	0,168	68	0,2468097
15,728	534,6	535,1	99,55	100,41	0,173	0,168	69	0,2478358
15,605	534,6	535,1	101,01	101,69	0,173	0,168	70	0,2453672
15,762	534,7	535,2	100,23	101,43	0,173	0,168	71	0,2474254
15,551	534,7	535,2	101,64	102,54	0,173	0,168	72	0,2439146
15,576	534,8	535,2	101,93	103,07	0,173	0,168	73	0,2439152
15,582	534,8	535,2	102,03	102,76	0,173	0,168	74	0,2439146
15,617	534,9	535,3	101,97	102,57	0,174	0,168	75	0,2443303
15,765	534,9	535,3	100,92	102,06	0,173	0,168	76	0,2463985
15,684	535,0	535,4	101,85	102,63	0,173	0,168	77	0,2449534
15,645	535,1	535,4	101,79	103,32	0,173	0,168	78	0,2443308
15,595	535,1	535,5	102,24	103,62	0,173	0,168	79	0,2432897
15,640	535,2	535,6	102,38	103,47	0,173	0,168	80	0,2439148
15,556	535,2	535,6	102,96	103,93	0,173	0,168	81	0,2424545
15,495	535,2	535,6	103,66	104,14	0,173	0,168	82	0,2414067
15,570	535,3	535,7	103,18	104,03	0,174	0,168	83	0,2424537
15,630	535,3	535,7	102,89	103,52	0,173	0,168	84	0,2432897
15,521	535,3	535,7	103,52	104,60	0,173	0,168	85	0,2414062
15,653	535,4	535,8	102,44	103,19	0,173	0,168	86	0,2439151
15,728	535,5	535,9	101,19	102,10	0,173	0,168	87	0,2457795
15,699	535,5	535,9	101,10	102,27	0,173	0,168	88	0,2457797
15,658	535,6	535,9	101,27	102,04	0,173	0,168	89	0,2453674
15,617	535,6	536,0	101,12	101,91	0,173	0,168	90	0,2449529
15,314	535,6	536,0	102,77	104,29	0,173	0,168	91	0,2403541
15,821	535,6	536,0	99,70	100,53	0,173	0,168	92	0,2484498
15,584	535,6	536,0	100,94	101,92	0,173	0,168	93	0,2449534
15,656	535,6	536,1	100,22	101,38	0,173	0,168	94	0,2463994
15,739	535,6	536,0	100,04	100,68	0,173	0,168	95	0,2478362
15,668	535,5	536,0	99,92	100,83	0,173	0,168	96	0,2468104
15,832	535,6	536,1	99,18	99,92	0,173	0,168	97	0,2492644
15,841	535,6	536,1	98,92	99,90	0,173	0,168	98	0,2492648
15,839	535,7	536,2	99,14	100,08	0,173	0,168	99	0,2492666
15,726	535,7	536,2	99,80	100,70	0,173	0,168	100	0,247426
15,712	535,7	536,3	99,86	101,19	0,173	0,168	101	0,2471112
15,604	535,8	536,3	100,72	101,66	0,173	0,168	102	0,2453672
15,682	535,8	536,3	100,48	101,36	0,173	0,168	103	0,2463676
15,638	535,8	536,3	101,07	101,74	0,173	0,168	104	0,2453672
15,664	535,8	536,3	100,95	101,88	0,173	0,168	105	0,2453676
15,704	535,8	536,3	101,14	101,63	0,173	0,167	106	0,2457798
15,772	535,8	536,3	99,91	101,03	0,173	0,168	107	0,2474296
15,657	535,9	536,4	100,44	102,13	0,173	0,168	108	0,2457801
15,600	536,0	536,5	101,11	101,97	0,173	0,168	109	0,2449535
15,586	536,0	536,5	100,91	101,81	0,173	0,168	110	0,2449533
15,701	536,1	536,5	100,33	101,05	0,173	0,168	111	0,2468107
15,733	536,1	536,6	99,95	100,50	0,173	0,168	112	0,2474263
15,662	536,1	536,6	100,37	101,16	0,173	0,168	113	0,2463997
15,726	536,1	536,6	99,72	100,73	0,173	0,168	114	0,2474268
15,586	536,1	536,6	100,67	101,71	0,173	0,168	115	0,245368
15,676	536,0	536,6	99,91	100,91	0,173	0,168	116	0,2468108
15,581	536,0	536,6	100,59	101,45	0,173	0,168	117	0,2453676
15,670	535,9	536,6	100,07	100,85	0,173	0,168	118	0,2468105
15,705	535,9	536,5	99,46	100,47	0,173	0,168	119	0,2474262
15,637	536,0	536,5	99,99	101,07	0,173	0,168	120	0,2463999
15,567	536,0	536,6	100,17	101,49	0,173	0,168	121	0,2454172
15,594	536,0	536,6	100,18	101,55	0,173	0,168	122	0,2457816
15,655	536,0	536,6	99,98	101,00	0,173	0,168	123	0,2468109
15,689	536,1	536,6	99,60	100,61	0,173	0,168	124	0,247426
15,643	536,0	536,6	99,88	100,79	0,173	0,168	125	0,2468107
15,637	536,0	536,6	99,68	100,62	0,173	0,168	126	0,2468105
15,629	536,0	536,6	99,75	100,63	0,173	0,168	127	0,2468107
15,601	536,0	536,6	99,78	100,86	0,173	0,168	128	0,2463995
15,636	535,9	536,6	99,58	100,62	0,173	0,168	129	0,2468107

15,850	535,9	536,6	98,51	99,15	0,173	0,168	130	0,2502814
15,738	536,0	536,6	99,15	100,13	0,173	0,168	131	0,2484498
15,611	536,0	536,6	100,25	100,72	0,173	0,168	132	0,2464001
15,673	536,1	536,6	99,30	100,18	0,173	0,168	133	0,2474273
15,694	536,1	536,6	99,22	100,47	0,173	0,168	134	0,2478373
15,738	536,0	536,6	98,80	100,03	0,173	0,168	135	0,24845
15,554	536,0	536,7	100,16	100,86	0,173	0,168	136	0,2457804
15,597	536,0	536,7	100,23	100,92	0,173	0,168	137	0,2463996
15,693	536,0	536,7	99,20	100,46	0,173	0,168	138	0,247837
15,600	536,0	536,7	99,93	100,77	0,173	0,168	139	0,2464001
15,782	536,0	536,6	98,78	99,57	0,173	0,168	140	0,2492657
15,594	536,0	536,6	99,66	100,84	0,173	0,168	141	0,2463999
15,561	536,0	536,6	99,73	100,61	0,173	0,168	142	0,2457802
15,628	536,0	536,7	99,74	100,97	0,173	0,168	143	0,2468108
15,623	536,1	536,7	99,64	100,74	0,173	0,168	144	0,2468071
15,663	536,2	536,7	99,71	100,49	0,173	0,168	145	0,247427
15,689	536,1	536,8	99,59	100,25	0,174	0,168	146	0,2478379
15,688	536,2	536,8	99,21	99,95	0,173	0,168	147	0,2478376
15,716	536,2	536,8	98,85	99,70	0,173	0,168	148	0,2484519
15,382	536,2	536,8	100,73	101,72	0,173	0,168	149	0,2432919
15,648	536,2	536,8	99,01	100,02	0,173	0,167	150	0,2474268
15,714	536,3	536,9	98,69	100,01	0,173	0,168	151	0,248451
15,871	536,3	536,9	97,96	99,00	0,173	0,168	152	0,2508899
15,613	536,2	536,9	99,70	100,48	0,173	0,168	153	0,2468117
15,716	536,3	536,9	98,96	99,68	0,173	0,168	154	0,2484511
15,769	536,3	537,0	98,50	99,44	0,173	0,168	155	0,2492669
15,713	536,3	537,0	98,79	99,89	0,173	0,168	156	0,2484516
15,767	536,4	537,0	98,47	99,67	0,173	0,168	157	0,2492675
15,807	536,4	537,1	98,24	99,19	0,173	0,168	158	0,2498776
15,707	536,5	537,1	99,17	99,93	0,173	0,168	159	0,2484547
15,792	536,5	537,1	98,08	99,33	0,173	0,168	160	0,2498779
15,669	536,5	537,1	99,13	99,89	0,173	0,168	161	0,2478391
15,798	536,4	537,2	98,02	99,07	0,173	0,168	162	0,2498782
15,661	536,5	537,2	99,02	99,77	0,173	0,168	163	0,2478401
15,792	536,5	537,2	98,12	99,35	0,173	0,168	164	0,2498789
15,859	536,5	537,2	97,63	98,93	0,173	0,168	165	0,2508922
15,856	536,7	537,3	97,73	98,96	0,173	0,168	166	0,2508926
15,694	536,7	537,3	98,70	99,68	0,173	0,168	167	0,2484536
15,852	536,8	537,4	97,82	98,91	0,173	0,168	168	0,2508932
15,811	536,8	537,5	97,75	98,74	0,173	0,168	169	0,2502859
15,748	536,9	537,5	98,41	99,27	0,173	0,168	170	0,2492705
15,875	536,9	537,6	97,30	98,19	0,173	0,167	171	0,2512992
15,843	536,9	537,6	97,34	98,91	0,172	0,168	172	0,2508951
15,841	537,0	537,7	97,68	98,76	0,173	0,168	173	0,2508948
15,860	537,0	537,7	97,38	98,42	0,173	0,168	174	0,2513002
15,887	537,0	537,7	97,45	98,54	0,173	0,168	175	0,2517034
15,876	537,0	537,8	97,28	98,17	0,173	0,168	176	0,2517041
15,757	537,1	537,8	98,00	98,82	0,173	0,168	177	0,2498828
15,851	537,1	537,8	97,25	98,26	0,173	0,168	178	0,2513008
15,855	537,0	537,8	97,45	98,53	0,173	0,168	179	0,2513013
15,914	537,0	537,8	96,89	98,27	0,173	0,168	180	0,2523088
15,910	537,1	537,9	96,93	98,00	0,173	0,168	181	0,252309
15,760	537,1	537,9	97,99	99,09	0,173	0,168	182	0,2498883
15,874	537,2	538,0	97,05	98,17	0,173	0,168	183	0,2517053
15,852	537,3	538,0	97,02	98,10	0,172	0,167	184	0,251302
15,972	537,3	538,0	96,52	97,56	0,172	0,167	185	0,2533132
15,846	537,2	538,0	97,19	98,30	0,173	0,168	186	0,2513025
15,818	537,2	538,0	97,45	98,71	0,173	0,168	187	0,2508978
15,819	537,2	538,0	97,57	98,33	0,173	0,168	188	0,2508984
15,754	537,2	538,0	97,87	98,76	0,173	0,167	189	0,2498852
15,774	537,1	537,9	97,70	98,41	0,173	0,167	190	0,2502906
15,814	537,1	537,9	97,37	98,06	0,173	0,167	191	0,2508978
15,810	537,1	537,9	97,42	98,37	0,173	0,167	192	0,2508983
15,809	537,1	537,9	97,34	98,23	0,173	0,168	193	0,250898
15,898	537,1	537,9	96,88	97,95	0,173	0,168	194	0,2523097
15,889	537,1	537,9	96,55	97,99	0,173	0,168	195	0,2523099
15,853	537,1	537,9	96,95	98,15	0,172	0,168	196	0,2517061
15,697	537,1	537,9	97,87	99,03	0,173	0,168	197	0,2492748
15,824	537,1	537,9	97,16	98,38	0,173	0,168	198	0,2513021

Average	Average	Average						Average
16,58	Inlet +	Inlet +						0,255
	Outlet	Outlet	Average	Average	#1	#2		
Tunnel	Temp.	Temp.	100,08	100,57	System 1	System 2		SQRT
Velocity	Meter 1	Meter 2	**Proportional Rates**		Vol.Std.	Vol.Std.		Delta-P
			PR1	**PR2**			Time	
Ft/Sec	Deg. R	Deg. R	**%**	**%**	(ft3)	(ft3)	min	(in H2O)2
15,757	533,0	533,5			0,171	0,165	0	0,2344807
16,293	533,3	533,6	108,74	109,34	0,171	0,165	1	0,2428694
16,331	533,3	533,7	107,66	107,59	0,171	0,165	2	0,244914
16,470	533,3	533,7	103,79	104,23	0,171	0,164	3	0,2498707
16,392	533,4	533,7	103,17	103,55	0,171	0,164	4	0,250277
16,490	533,4	533,7	101,82	102,63	0,171	0,165	5	0,2522954
16,329	533,3	533,7	102,71	103,54	0,171	0,165	6	0,2502778
16,511	533,3	533,7	101,29	101,83	0,171	0,165	7	0,2532996
16,599	533,3	533,7	100,61	101,50	0,170	0,165	8	0,2546982
16,459	533,3	533,6	101,50	101,97	0,171	0,165	9	0,2526991
16,696	533,2	533,6	100,03	100,23	0,171	0,164	10	0,2564858
16,443	533,2	533,6	101,60	101,90	0,171	0,164	11	0,2526524
16,444	533,2	533,5	101,28	102,28	0,171	0,165	12	0,2526982
16,504	533,2	533,5	101,12	101,51	0,171	0,165	13	0,2537007
16,412	533,2	533,5	101,36	102,31	0,171	0,165	14	0,2522962
16,410	533,2	533,5	101,28	102,16	0,170	0,165	15	0,2522938
16,559	533,2	533,5	100,65	101,11	0,171	0,165	16	0,2546987
16,652	533,2	533,5	100,02	100,48	0,171	0,165	17	0,2560896
16,427	533,1	533,5	101,56	101,97	0,171	0,165	18	0,2526983
16,677	533,1	533,5	100,00	100,13	0,171	0,165	19	0,2564853
16,467	533,2	533,5	101,27	101,75	0,171	0,165	20	0,2532994
16,490	533,2	533,5	100,86	101,62	0,171	0,165	21	0,2537
16,512	533,1	533,5	100,86	101,25	0,171	0,165	22	0,2540995
16,392	533,1	533,5	101,41	101,92	0,171	0,165	23	0,2522955
16,632	533,0	533,5	99,97	100,73	0,171	0,165	24	0,2560888
16,414	533,0	533,5	101,41	101,54	0,171	0,165	25	0,2526983
16,545	533,0	533,4	100,30	101,16	0,171	0,165	26	0,2546979
16,512	533,0	533,3	100,67	101,48	0,171	0,165	27	0,2541343
16,636	533,0	533,4	99,72	100,84	0,170	0,165	28	0,2560886
16,504	533,0	533,3	100,63	101,33	0,170	0,165	29	0,2540993
16,454	533,0	533,4	101,21	101,39	0,171	0,165	30	0,2532983
16,410	532,9	533,3	101,33	101,87	0,171	0,165	31	0,2526963
16,502	532,9	533,3	100,86	101,15	0,171	0,165	32	0,2540985
16,692	532,9	533,3	99,51	99,97	0,171	0,165	33	0,2570764
16,548	532,9	533,3	100,61	101,36	0,171	0,165	34	0,2546969
16,417	532,9	533,3	101,19	101,77	0,171	0,165	35	0,2528006
16,537	532,9	533,3	100,32	100,97	0,171	0,165	36	0,2546969
16,698	532,9	533,3	99,78	99,80	0,171	0,165	37	0,2570767
16,449	532,9	533,3	101,14	101,50	0,171	0,164	38	0,2532954
16,495	532,9	533,3	101,06	101,27	0,171	0,165	39	0,2540982
16,464	532,9	533,3	100,67	101,37	0,171	0,165	40	0,2536987
16,507	532,9	533,3	100,73	101,43	0,171	0,165	41	0,2540984
16,443	532,9	533,3	100,77	101,60	0,171	0,165	42	0,253298
16,631	532,9	533,3	100,08	100,43	0,171	0,165	43	0,2560882
16,655	532,9	533,3	100,21	100,20	0,171	0,165	44	0,2564838
16,651	532,9	533,3	99,71	100,37	0,171	0,165	45	0,2564834
16,688	532,9	533,3	99,64	99,79	0,171	0,165	46	0,2570762
16,493	532,9	533,3	100,79	101,14	0,171	0,165	47	0,2540984
16,657	532,8	533,3	99,69	100,20	0,171	0,165	48	0,2564833
16,469	532,8	533,3	100,52	101,38	0,170	0,165	49	0,2536994
16,378	532,9	533,3	101,49	101,87	0,171	0,165	50	0,2522941
16,632	532,9	533,3	99,97	100,26	0,171	0,165	51	0,2560877
16,406	532,9	533,4	101,60	101,61	0,171	0,164	52	0,252698
16,493	532,9	533,3	101,09	101,21	0,171	0,165	53	0,2540832
16,436	532,9	533,3	100,98	101,61	0,171	0,165	54	0,2532982
16,491	532,9	533,3	100,65	101,19	0,171	0,165	55	0,254098
16,315	532,8	533,3	101,67	102,43	0,171	0,165	56	0,2512873
16,490	532,9	533,3	100,42	101,50	0,170	0,165	57	0,2540982
16,283	532,8	533,3	101,81	102,86	0,170	0,165	58	0,2508826
16,689	532,8	533,3	99,60	100,05	0,171	0,165	59	0,2570766
16,629	532,8	533,3	100,12	100,52	0,171	0,165	60	0,2560855

16,625	532,8	533,3	100,03	100,15	0,171	0,165	61	0,256088
16,622	532,8	533,3	99,88	100,42	0,171	0,165	62	0,256088
16,412	532,8	533,3	101,27	101,82	0,171	0,165	63	0,2526963
16,469	532,9	533,3	100,82	101,28	0,171	0,165	64	0,2536966
16,384	532,9	533,3	101,42	102,04	0,171	0,165	65	0,2522946
16,539	532,8	533,3	100,91	100,94	0,171	0,165	66	0,2546969
16,534	532,8	533,3	100,38	100,85	0,171	0,165	67	0,2546961
16,409	532,8	533,3	101,41	101,74	0,171	0,165	68	0,2526972
16,443	532,8	533,3	100,83	101,47	0,171	0,165	69	0,2532979
16,484	532,8	533,3	101,01	101,63	0,171	0,165	70	0,253699
16,452	532,8	533,3	101,03	101,19	0,171	0,165	71	0,2532979
16,543	532,9	533,3	100,36	101,22	0,171	0,165	72	0,2546965
16,632	532,9	533,3	99,95	100,54	0,171	0,165	73	0,256088
16,494	532,9	533,3	100,86	101,19	0,171	0,165	74	0,2539593
16,451	532,9	533,3	101,18	101,39	0,171	0,165	75	0,2532978
16,539	532,9	533,3	100,32	101,39	0,171	0,165	76	0,2546963
16,544	532,9	533,3	100,63	101,16	0,171	0,165	77	0,2546968
16,474	532,9	533,3	100,67	101,33	0,171	0,165	78	0,2536987
16,390	533,0	533,4	101,16	101,79	0,170	0,165	79	0,2523409
16,508	533,0	533,4	100,86	101,17	0,171	0,165	80	0,2540984
16,634	533,0	533,4	99,95	100,76	0,171	0,165	81	0,2560874
16,631	533,0	533,4	100,15	100,61	0,171	0,165	82	0,2560873
16,534	532,9	533,3	100,59	100,74	0,171	0,165	83	0,254696
16,483	532,9	533,3	101,10	101,15	0,171	0,164	84	0,2536982
16,506	532,9	533,3	100,69	101,51	0,171	0,165	85	0,2540981
16,417	533,0	533,4	101,42	101,71	0,171	0,165	86	0,2526965
16,553	533,0	533,4	100,50	101,06	0,171	0,165	87	0,2546961
16,483	533,0	533,5	100,95	100,93	0,171	0,164	88	0,2536985
16,641	533,0	533,5	100,14	100,27	0,171	0,164	89	0,2560879
16,354	532,9	533,4	101,66	102,07	0,171	0,164	90	0,2517059
16,548	532,9	533,4	100,26	100,97	0,170	0,165	91	0,2546963
16,518	532,9	533,4	100,87	101,33	0,171	0,165	92	0,2540987
16,673	533,0	533,4	99,87	100,42	0,171	0,165	93	0,2564418
16,435	533,0	533,5	101,38	101,90	0,171	0,165	94	0,2526978
16,567	533,0	533,5	101,04	101,17	0,171	0,165	95	0,2546972
16,499	533,0	533,5	100,91	101,48	0,171	0,165	96	0,2536994
16,500	533,1	533,6	101,12	101,58	0,171	0,165	97	0,2536999
16,501	533,1	533,6	100,80	101,31	0,171	0,165	98	0,2537094
16,494	533,1	533,6	101,33	101,72	0,171	0,164	99	0,2532993
16,671	533,1	533,6	100,10	100,83	0,171	0,165	100	0,2560892
16,364	533,2	533,6	101,92	102,53	0,171	0,165	101	0,251288
16,588	533,3	533,7	100,70	101,24	0,171	0,165	102	0,2546975
16,525	533,3	533,7	101,18	101,76	0,171	0,165	103	0,2536995
16,588	533,3	533,7	100,83	100,95	0,171	0,165	104	0,2546974
16,528	533,3	533,7	100,97	101,65	0,171	0,164	105	0,2536996
16,599	533,3	533,7	100,92	101,48	0,171	0,165	106	0,2546655
16,605	533,3	533,7	100,60	101,65	0,171	0,165	107	0,2546975
16,519	533,4	533,8	101,10	101,86	0,170	0,165	108	0,2532985
16,460	533,4	533,8	101,92	102,22	0,170	0,164	109	0,2522952
16,583	533,4	533,8	101,10	101,70	0,171	0,165	110	0,2541245
16,464	533,4	533,9	102,06	102,26	0,171	0,165	111	0,2522949
16,586	533,4	533,9	101,27	101,49	0,171	0,164	112	0,2540986
16,494	533,4	533,9	101,87	102,18	0,171	0,164	113	0,2526973
16,569	533,4	533,9	101,29	102,07	0,171	0,165	114	0,2536999
16,501	533,5	533,9	101,84	102,13	0,171	0,165	115	0,2526974
16,501	533,5	533,9	101,67	101,98	0,171	0,164	116	0,252698
16,483	533,6	534,0	101,98	102,26	0,171	0,164	117	0,2522953
16,545	533,6	534,0	101,63	101,95	0,171	0,164	118	0,2532989
16,522	533,6	534,0	101,46	102,09	0,171	0,164	119	0,2529129
16,481	533,6	534,0	101,84	102,57	0,170	0,165	120	0,2522946
16,502	533,5	534,0	101,49	102,31	0,170	0,165	121	0,2526974
16,605	533,5	534,0	101,14	101,85	0,170	0,165	122	0,2541001
16,501	533,6	534,0	101,88	102,45	0,171	0,165	123	0,2526921
16,442	533,6	534,0	102,21	102,61	0,171	0,165	124	0,251691
16,545	533,6	534,1	101,62	101,49	0,171	0,164	125	0,2532987
16,567	533,7	534,1	101,26	101,63	0,171	0,164	126	0,2537
16,477	533,7	534,1	101,94	102,39	0,171	0,164	127	0,2522953
16,497	533,6	534,1	101,62	102,39	0,171	0,165	128	0,2526978
16,785	533,7	534,1	99,80	100,66	0,170	0,165	129	0,2570773

16,717	533,8	534,2	100,51	100,85	0,171	0,165	130	0,256088
16,339	533,8	534,2	102,73	103,13	0,171	0,165	131	0,2502765
16,562	533,8	534,2	101,62	101,83	0,171	0,165	132	0,2536992
16,773	533,8	534,2	99,70	100,17	0,171	0,164	133	0,2570765
16,526	533,8	534,3	101,30	101,71	0,170	0,164	134	0,2532981
16,543	533,8	534,3	100,88	101,56	0,170	0,164	135	0,2536997
16,452	533,9	534,3	101,81	102,03	0,170	0,164	136	0,2522953
16,702	533,9	534,3	100,61	100,93	0,171	0,165	137	0,2560891
16,567	533,9	534,3	100,89	101,52	0,171	0,165	138	0,2540993
16,476	533,9	534,4	101,61	101,88	0,171	0,164	139	0,2526981
16,552	533,9	534,4	101,08	101,72	0,171	0,165	140	0,2539277
16,563	533,9	534,4	100,79	101,42	0,170	0,165	141	0,2540992
16,562	533,9	534,4	100,56	101,35	0,170	0,164	142	0,2540995
16,298	533,9	534,4	102,43	102,87	0,170	0,164	143	0,2502769
16,458	533,9	534,4	101,42	102,20	0,171	0,165	144	0,2526977
16,597	533,9	534,4	100,99	101,14	0,171	0,165	145	0,2546971
16,557	533,9	534,4	101,28	101,39	0,171	0,164	146	0,2540993
16,465	533,9	534,4	101,44	101,51	0,171	0,164	147	0,2526979
16,600	533,9	534,4	100,64	101,17	0,170	0,164	148	0,2546979
16,500	533,9	534,4	100,99	101,67	0,170	0,164	149	0,2533
16,561	533,9	534,4	100,65	101,51	0,170	0,165	150	0,2540993
16,533	533,9	534,4	100,89	102,05	0,170	0,165	151	0,2537
16,533	533,9	534,4	101,11	101,69	0,170	0,165	152	0,2536994
16,391	534,0	534,4	102,27	102,45	0,171	0,164	153	0,2512884
16,704	534,0	534,4	100,29	100,76	0,171	0,164	154	0,2560892
16,525	534,0	534,4	101,26	101,49	0,170	0,164	155	0,2532992
16,528	534,0	534,5	101,27	101,69	0,170	0,164	156	0,2533015
16,487	534,1	534,5	101,50	102,02	0,170	0,164	157	0,2526982
16,454	534,0	534,5	101,62	102,40	0,170	0,165	158	0,2522951
16,445	534,0	534,5	102,04	102,15	0,171	0,165	159	0,2522948
16,687	534,0	534,5	99,99	100,41	0,171	0,164	160	0,2560887
16,291	534,0	534,5	102,62	102,95	0,170	0,164	161	0,2500157
16,294	534,1	534,5	102,25	102,60	0,170	0,164	162	0,2501011
16,553	534,0	534,5	100,88	101,30	0,170	0,164	163	0,2540992
16,503	534,1	534,5	101,10	101,86	0,170	0,165	164	0,2532992
16,524	534,0	534,5	100,82	101,74	0,170	0,165	165	0,2536968
16,359	534,0	534,5	101,88	102,60	0,170	0,165	166	0,2512883
16,692	534,0	534,5	99,86	100,30	0,170	0,165	167	0,2564846
16,763	534,0	534,5	99,58	99,83	0,171	0,164	168	0,2574723
16,484	533,9	534,4	100,91	101,20	0,170	0,164	169	0,2532998
16,535	534,0	534,5	100,84	101,15	0,170	0,164	170	0,2540994
16,545	534,0	534,5	100,59	101,35	0,170	0,164	171	0,2540996
16,532	534,0	534,5	100,45	101,34	0,170	0,165	172	0,2540954
16,376	533,9	534,5	101,79	102,38	0,170	0,165	173	0,2516919
16,685	533,9	534,5	99,77	100,10	0,171	0,164	174	0,2564845
16,684	533,9	534,4	99,99	100,26	0,171	0,164	175	0,2564849
16,384	533,9	534,4	101,88	102,05	0,171	0,164	176	0,2516925
16,376	534,0	534,4	101,85	101,99	0,171	0,164	177	0,251691
16,568	534,0	534,5	100,38	100,86	0,171	0,164	178	0,2546972
16,691	534,0	534,5	99,89	100,32	0,170	0,164	179	0,2564847
16,326	534,0	534,5	101,96	103,06	0,170	0,165	180	0,2508835
16,570	534,0	534,5	100,51	101,16	0,170	0,165	181	0,2546982
16,517	534,0	534,5	100,77	101,06	0,171	0,165	182	0,2540993
16,513	533,9	534,4	100,54	101,25	0,171	0,164	183	0,2540995
16,675	533,9	534,4	99,44	100,21	0,170	0,165	184	0,2564843
16,425	533,9	534,4	101,23	101,39	0,170	0,164	185	0,2526976
16,679	534,0	534,4	99,66	100,29	0,170	0,164	186	0,2564843
16,501	534,0	534,5	100,89	101,44	0,170	0,165	187	0,2536993
16,518	534,0	534,5	100,79	101,36	0,171	0,165	188	0,254099
16,639	533,9	534,4	99,87	100,26	0,171	0,165	189	0,2560891
16,638	533,9	534,4	99,88	100,32	0,171	0,164	190	0,2560889
16,649	533,8	534,4	99,55	99,83	0,171	0,164	191	0,2564843
16,499	533,9	534,4	100,59	100,96	0,171	0,164	192	0,2540989
16,478	533,9	534,4	100,69	101,25	0,171	0,164	193	0,2536999
16,624	533,9	534,3	99,78	99,87	0,171	0,164	194	0,2560894
16,628	533,9	534,3	99,52	100,45	0,170	0,164	195	0,2560892
16,629	533,9	534,3	99,69	100,25	0,170	0,165	196	0,2560886
16,648	533,8	534,3	99,50	99,96	0,170	0,164	197	0,2564843
16,529	533,8	534,3	100,26	100,68	0,170	0,164	198	0,2546973

16,635	533,8	534,3	99,46	100,07	0,170	0,164	199	0,2564839
16,685	533,8	534,3	99,30	99,72	0,170	0,164	200	0,2570782
16,487	533,8	534,3	100,88	101,05	0,171	0,164	201	0,2540988
16,619	533,8	534,3	99,62	100,34	0,171	0,165	202	0,2560879
16,466	533,8	534,3	100,77	101,06	0,171	0,164	203	0,2536991
16,634	533,8	534,3	99,42	100,28	0,170	0,165	204	0,2563173
16,626	533,7	534,3	99,52	99,78	0,170	0,164	205	0,2564805
16,619	533,7	534,2	99,53	99,80	0,171	0,164	206	0,2562923
16,697	533,7	534,2	98,97	99,48	0,170	0,164	207	0,2574727
16,449	533,8	534,2	100,55	100,90	0,170	0,164	208	0,2536992
16,631	533,8	534,2	99,53	100,08	0,171	0,164	209	0,2564849
16,610	533,8	534,3	99,78	100,29	0,171	0,165	210	0,2560888
16,688	533,8	534,3	98,90	99,90	0,170	0,165	211	0,2574715
16,620	533,8	534,3	99,53	99,97	0,170	0,165	212	0,2564841
16,626	533,7	534,3	99,26	99,88	0,170	0,164	213	0,2564837
16,621	533,6	534,2	99,17	99,98	0,170	0,164	214	0,2564841
16,758	533,6	534,1	98,84	99,03	0,170	0,164	215	0,2584556
16,504	533,7	534,1	100,13	100,66	0,171	0,164	216	0,254697
16,720	533,7	534,1	99,02	99,50	0,171	0,165	217	0,2580607
16,394	533,6	534,1	100,69	101,35	0,171	0,165	218	0,2532992
16,566	533,3	533,8	99,65	100,08	0,171	0,165	219	0,2560883
16,588	533,1	533,6	99,28	99,83	0,171	0,165	220	0,2564844
16,738	533,0	533,5	98,84	99,13	0,171	0,165	221	0,2584549
16,584	532,9	533,5	99,61	100,21	0,171	0,165	222	0,2560881
16,717	532,9	533,4	98,98	99,53	0,171	0,165	223	0,2580623
16,585	532,8	533,3	99,82	100,28	0,171	0,165	224	0,256088
16,651	532,8	533,3	99,11	100,00	0,171	0,165	225	0,2570763
16,711	532,8	533,3	98,84	99,48	0,171	0,165	226	0,2580617
16,645	532,8	533,3	99,05	99,57	0,171	0,165	227	0,2570766
16,776	532,8	533,3	98,60	98,84	0,171	0,164	228	0,2588474
16,609	532,9	533,3	99,65	99,92	0,171	0,164	229	0,2564832
16,653	533,0	533,4	99,34	99,90	0,171	0,165	230	0,2570771
16,612	533,0	533,4	99,64	100,28	0,171	0,165	231	0,2564609
16,678	533,0	533,4	99,09	99,90	0,171	0,165	232	0,2574723
16,647	533,0	533,4	99,33	99,77	0,171	0,165	233	0,2570764
16,708	533,0	533,5	98,80	99,33	0,171	0,165	234	0,2580618
16,710	533,0	533,5	98,72	99,23	0,171	0,165	235	0,2580614
16,618	533,0	533,5	99,75	99,92	0,171	0,165	236	0,2564833
16,584	533,1	533,5	99,73	100,31	0,171	0,165	237	0,2560877
16,665	533,1	533,5	99,41	99,91	0,171	0,165	238	0,2574715
16,643	533,1	533,5	99,08	99,60	0,171	0,165	239	0,2570766
16,599	533,1	533,5	99,39	99,89	0,171	0,165	240	0,256483
16,468	533,0	533,5	99,79	100,23	0,171	0,164	241	0,2546978
16,577	532,8	533,3	99,46	99,67	0,171	0,164	242	0,256483
16,667	532,7	533,2	99,55	99,62	0,171	0,165	243	0,2574713
16,701	532,7	533,2	98,83	99,54	0,171	0,165	244	0,2580608
16,600	532,8	533,2	99,60	99,96	0,171	0,165	245	0,2564834
16,704	532,7	533,2	98,99	99,96	0,171	0,165	246	0,2580617
16,731	532,7	533,2	98,63	99,14	0,171	0,165	247	0,2584552
16,725	532,7	533,3	98,38	99,02	0,170	0,165	248	0,258455
16,721	532,7	533,2	98,78	99,38	0,171	0,165	249	0,258455
16,652	532,7	533,2	99,37	99,67	0,171	0,165	250	0,2570767
16,664	532,8	533,2	99,44	99,76	0,171	0,165	251	0,2574711
16,601	532,9	533,3	99,86	100,24	0,171	0,165	252	0,2564834
16,642	532,9	533,3	99,27	99,60	0,171	0,165	253	0,2570764
16,702	532,9	533,4	98,82	99,31	0,171	0,165	254	0,2580619
16,658	532,9	533,4	98,86	99,73	0,171	0,165	255	0,2574715
16,681	532,9	533,4	98,66	99,23	0,170	0,165	256	0,2578323
16,794	532,9	533,4	98,19	98,64	0,170	0,164	257	0,2594344
16,633	532,9	533,4	99,25	100,08	0,171	0,165	258	0,2570765
16,571	533,0	533,4	99,74	100,24	0,171	0,165	259	0,2560902
16,638	533,0	533,4	99,31	99,58	0,171	0,165	260	0,2570764
16,699	533,0	533,5	98,78	99,21	0,171	0,165	261	0,2580617
16,699	533,0	533,5	98,77	99,40	0,171	0,165	262	0,2580618
16,658	533,0	533,5	98,98	99,45	0,171	0,165	263	0,257472
16,743	533,0	533,5	98,43	98,93	0,171	0,165	264	0,2588472
16,818	533,0	533,5	98,56	98,33	0,171	0,164	265	0,2598269
16,719	533,1	533,6	98,53	99,21	0,171	0,165	266	0,2584548
16,591	533,1	533,6	99,47	100,25	0,171	0,165	267	0,2564835

16,596	533,1	533,6	99,19	99,83	0,171	0,165	268	0,2564838
16,627	533,1	533,6	99,18	99,75	0,171	0,165	269	0,2570766
16,586	533,1	533,6	99,29	99,80	0,171	0,165	270	0,2564837
16,707	533,0	533,5	98,41	98,75	0,171	0,164	271	0,2584553
16,585	533,0	533,5	99,35	99,78	0,171	0,164	272	0,2564831
16,910	533,0	533,5	97,60	98,11	0,171	0,165	273	0,2613846
16,713	533,0	533,5	98,71	99,36	0,171	0,165	274	0,2584557
16,691	533,1	533,6	98,59	99,34	0,171	0,165	275	0,258062
16,654	533,1	533,6	99,09	99,27	0,171	0,165	276	0,2574719
16,719	533,1	533,6	98,41	99,03	0,171	0,164	277	0,258455
16,584	533,1	533,6	99,06	99,55	0,170	0,164	278	0,256484
16,685	533,0	533,6	98,83	99,05	0,171	0,164	279	0,2580619
16,716	533,0	533,6	98,61	98,89	0,171	0,164	280	0,2584551
16,549	533,0	533,5	99,73	99,90	0,171	0,164	281	0,2559905
16,619	533,0	533,6	99,21	99,93	0,171	0,165	282	0,2570762
16,473	533,0	533,5	100,23	100,69	0,171	0,165	283	0,2546982
16,710	533,0	533,6	98,51	98,88	0,171	0,165	284	0,2584554
16,686	533,0	533,5	98,84	99,18	0,171	0,165	285	0,2580615
16,677	533,0	533,5	98,64	99,11	0,171	0,165	286	0,2580602
16,725	532,9	533,4	98,43	98,67	0,171	0,165	287	0,2588469
16,741	532,9	533,4	98,63	99,09	0,171	0,165	288	0,2588485
16,644	532,9	533,4	98,89	99,38	0,171	0,165	289	0,2574714
16,729	532,9	533,5	98,13	98,98	0,170	0,165	290	0,2588471
16,687	532,9	533,5	98,80	98,91	0,171	0,165	291	0,2580612
16,739	532,9	533,5	98,42	98,78	0,171	0,164	292	0,2588477
16,647	532,9	533,4	98,93	99,23	0,171	0,164	293	0,2574716
16,680	532,9	533,4	99,12	98,98	0,171	0,164	294	0,258062
16,708	532,9	533,5	98,50	99,06	0,171	0,165	295	0,2584549
16,743	532,9	533,4	98,60	99,39	0,171	0,165	296	0,2588474
16,641	532,9	533,5	98,74	99,42	0,171	0,165	297	0,2574716
16,581	533,0	533,5	99,37	99,75	0,171	0,165	298	0,2564844
16,586	533,1	533,5	99,29	99,74	0,171	0,165	299	0,2564845
16,581	533,1	533,6	99,15	99,67	0,171	0,165	300	0,2564839
16,680	533,1	533,6	98,67	99,04	0,171	0,164	301	0,2580623
16,680	533,1	533,6	98,74	99,33	0,171	0,165	302	0,2580621
16,727	533,1	533,6	98,49	98,85	0,171	0,165	303	0,2588474
16,779	533,1	533,6	98,07	98,58	0,171	0,165	304	0,2594349
16,765	533,1	533,6	98,25	98,53	0,171	0,165	305	0,2594349
16,730	533,1	533,6	98,18	98,61	0,171	0,164	306	0,2588474
16,686	533,1	533,6	98,45	99,02	0,170	0,164	307	0,2580626
16,556	533,0	533,5	99,50	99,76	0,171	0,164	308	0,2561842
16,730	533,0	533,5	98,39	98,62	0,171	0,164	309	0,2588485
16,671	533,0	533,5	98,85	99,24	0,171	0,165	310	0,2580711
16,673	533,0	533,6	98,78	99,36	0,171	0,165	311	0,2580623
16,690	533,0	533,5	98,91	99,20	0,171	0,165	312	0,2580643
16,725	533,1	533,6	98,28	98,94	0,171	0,165	313	0,2588479
16,456	533,1	533,6	100,04	100,31	0,171	0,165	314	0,2546985
16,734	533,1	533,6	98,34	99,03	0,171	0,165	315	0,2588482
16,705	533,1	533,7	98,56	99,01	0,171	0,165	316	0,2584566
16,729	533,2	533,7	98,48	98,94	0,171	0,165	317	0,2588477
16,727	533,2	533,7	98,14	98,89	0,171	0,165	318	0,2588482
16,700	533,2	533,7	98,40	99,16	0,170	0,165	319	0,258456
16,710	533,2	533,7	98,31	99,13	0,170	0,165	320	0,2584565
16,765	533,2	533,7	98,02	98,61	0,170	0,165	321	0,2594358
16,787	533,2	533,7	98,09	98,44	0,171	0,165	322	0,2598271
16,729	533,3	533,7	98,39	98,99	0,171	0,165	323	0,2588481
16,637	533,3	533,7	98,96	99,53	0,171	0,165	324	0,2574731
16,605	533,2	533,7	98,94	99,39	0,171	0,165	325	0,257078
16,595	533,1	533,7	99,00	99,54	0,171	0,165	326	0,2570779
16,662	533,1	533,6	98,51	99,21	0,171	0,165	327	0,2580664
16,792	533,1	533,6	97,84	98,31	0,171	0,165	328	0,2598269
16,783	533,1	533,6	98,14	98,58	0,171	0,165	329	0,2598274
16,634	533,2	533,7	98,94	99,21	0,171	0,165	330	0,2574729
16,696	533,2	533,6	98,83	99,28	0,171	0,165	331	0,2584557
16,668	533,2	533,7	98,45	98,96	0,171	0,165	332	0,2580624
16,700	533,1	533,7	98,46	98,91	0,171	0,165	333	0,2584562
16,720	533,1	533,7	98,08	98,92	0,171	0,165	334	0,2588479
16,662	533,0	533,6	98,71	99,19	0,171	0,165	335	0,2580631
16,640	533,0	533,6	99,33	98,96	0,171	0,164	336	0,2574726

16,758	533,1	533,6	98,05	98,51	0,171	0,164	337	0,2594357
16,631	533,2	533,7	98,94	99,35	0,171	0,165	338	0,2574729
16,699	533,2	533,7	98,58	99,06	0,171	0,165	339	0,2584563
16,669	533,2	533,7	98,48	99,25	0,171	0,165	340	0,258063
16,783	533,1	533,7	97,60	98,26	0,170	0,165	341	0,2598276
16,628	533,1	533,7	98,90	99,36	0,171	0,165	342	0,2574729
16,752	533,1	533,6	98,08	98,50	0,171	0,165	343	0,2594363
16,683	533,1	533,6	99,04	98,95	0,171	0,164	344	0,2580641
16,679	533,1	533,6	98,89	98,95	0,171	0,164	345	0,2582822
16,626	533,2	533,7	98,81	99,12	0,171	0,165	346	0,2574734
16,760	533,2	533,7	98,07	98,77	0,171	0,165	347	0,2594365
16,664	533,2	533,7	98,40	99,25	0,171	0,165	348	0,2580633
16,664	533,1	533,7	98,33	98,99	0,170	0,165	349	0,2580635
16,776	533,1	533,7	97,74	98,25	0,170	0,165	350	0,2598274
16,661	533,1	533,7	98,62	98,69	0,171	0,164	351	0,2580633
16,729	533,1	533,6	98,53	98,88	0,171	0,164	352	0,2588487
16,689	533,1	533,6	98,54	98,85	0,171	0,165	353	0,2584566
16,691	533,1	533,6	98,40	99,12	0,171	0,165	354	0,2584568

Average	Average	Average						Average
15,81	Inlet +	Inlet +						0,250
	Outlet	Outlet	Average	Average	#1	#2		
Tunnel	Temp.	Temp.	99,53	99,64	System 1	System 2		SQRT
Velocity	Meter 1	Meter 2	**Proportional Rates**		Vol.Std.	Vol.Std.		Delta-P
			PR1	**PR2**			Time	
Ft/Sec	Deg. R	Deg. R	**%**	**%**	(ft3)	(ft3)	min	(in H2O)2
15,218	531,4	532,1			0,176	0,167	0	0,2314903
15,645	531,7	532,3	102,84	103,31	0,175	0,167	1	0,2449429
15,749	531,7	532,3	101,33	101,59	0,175	0,167	2	0,2478263
15,717	531,7	532,3	100,81	101,79	0,175	0,168	3	0,2478268
15,777	531,7	532,3	100,61	101,08	0,175	0,168	4	0,2488482
15,761	531,7	532,3	100,41	101,43	0,175	0,168	5	0,2488484
15,563	531,7	532,3	101,54	102,55	0,175	0,168	6	0,24577
15,778	531,7	532,3	100,23	100,60	0,175	0,168	7	0,2492549
15,723	531,7	532,3	100,61	100,95	0,175	0,167	8	0,248439
15,719	531,7	532,3	100,64	100,91	0,175	0,167	9	0,2484393
15,712	531,7	532,3	100,31	100,93	0,175	0,167	10	0,2484393
15,740	531,7	532,3	100,43	100,97	0,175	0,168	11	0,2488479
15,769	531,7	532,3	99,97	101,18	0,175	0,168	12	0,249255
15,767	531,7	532,3	99,90	100,85	0,174	0,168	13	0,2492551
15,766	531,7	532,3	100,26	100,81	0,175	0,168	14	0,249255
15,803	531,6	532,3	99,92	100,50	0,175	0,168	15	0,2498643
15,728	531,6	532,2	100,49	100,70	0,175	0,167	16	0,2488475
15,599	531,6	532,2	101,23	101,75	0,175	0,168	17	0,2467999
15,723	531,6	532,2	100,39	101,26	0,175	0,168	18	0,2488475
15,752	531,6	532,2	100,02	100,99	0,175	0,168	19	0,2492548
15,724	531,6	532,2	100,35	100,89	0,175	0,168	20	0,2488477
15,698	531,6	532,2	100,34	101,02	0,175	0,168	21	0,2484389
15,730	531,6	532,2	100,31	100,63	0,175	0,167	22	0,2488476
15,630	531,6	532,2	100,94	101,19	0,175	0,167	23	0,247416
15,727	531,6	532,2	100,19	100,84	0,175	0,167	24	0,2488476
15,717	531,7	532,3	99,91	100,87	0,174	0,168	25	0,2488481
15,699	531,7	532,3	100,45	101,08	0,175	0,168	26	0,2484376
15,699	531,7	532,3	100,36	101,11	0,175	0,168	27	0,2484393
15,593	531,7	532,3	101,01	101,90	0,175	0,168	28	0,2467999
15,747	531,7	532,3	100,45	100,33	0,175	0,168	29	0,2492546
15,744	531,7	532,3	99,94	100,51	0,175	0,167	30	0,2492548
15,746	531,7	532,3	100,15	100,48	0,175	0,167	31	0,249255
15,626	531,6	532,3	100,57	101,40	0,175	0,168	32	0,2474183
15,686	531,7	532,3	100,37	101,15	0,175	0,168	33	0,2484401
15,712	531,7	532,3	100,10	100,79	0,175	0,168	34	0,2488482
15,802	531,7	532,3	99,43	100,15	0,175	0,168	35	0,2502714
15,773	531,7	532,3	99,71	100,29	0,175	0,168	36	0,2498653
15,807	531,6	532,3	99,68	99,89	0,175	0,167	37	0,2502714
15,741	531,7	532,3	100,13	100,67	0,175	0,167	38	0,249256
15,746	531,7	532,3	99,86	100,60	0,175	0,168	39	0,2492606
15,694	531,7	532,4	100,47	101,06	0,175	0,168	40	0,2484402
15,780	531,7	532,3	99,57	100,32	0,175	0,168	41	0,2498427
15,522	531,7	532,4	101,14	102,06	0,174	0,168	42	0,245772
15,871	531,7	532,4	99,30	99,58	0,175	0,167	43	0,251284
15,772	531,7	532,3	99,71	100,20	0,175	0,167	44	0,2498666
15,804	531,7	532,4	99,79	100,02	0,175	0,167	45	0,2502725
15,842	531,8	532,4	99,46	99,55	0,175	0,167	46	0,2508797
15,768	531,8	532,4	99,84	100,47	0,175	0,167	47	0,2498668
15,861	531,8	532,4	99,06	99,89	0,175	0,168	48	0,2512844
15,796	531,8	532,5	99,62	100,23	0,175	0,168	49	0,2502731
15,708	531,8	532,5	100,04	100,64	0,175	0,168	50	0,2488498
15,776	531,9	532,5	99,74	100,18	0,175	0,167	51	0,2498669
15,622	531,9	532,5	100,82	101,07	0,175	0,167	52	0,2474186
15,734	531,9	532,5	99,71	100,56	0,175	0,167	53	0,2492565
15,734	531,9	532,5	99,83	100,63	0,174	0,168	54	0,2492569
15,801	531,9	532,5	99,28	100,30	0,174	0,168	55	0,2502734
15,707	531,9	532,5	99,97	100,81	0,174	0,168	56	0,2488503
15,685	532,0	532,6	100,39	100,81	0,175	0,168	57	0,2484423
15,645	532,0	532,6	100,53	101,13	0,175	0,168	58	0,2478292
15,830	532,0	532,6	99,33	99,59	0,175	0,167	59	0,2508816
15,859	532,1	532,6	99,02	99,48	0,175	0,167	60	0,2512856

15,731	532,1	532,7	99,98	100,52	0,175	0,167	61	0,2492013
15,771	532,1	532,7	99,56	100,35	0,175	0,168	62	0,2498688
15,739	532,1	532,7	99,76	100,52	0,174	0,168	63	0,2492589
15,734	532,2	532,8	100,22	100,76	0,175	0,168	64	0,2490675
15,847	532,2	532,8	99,38	99,79	0,175	0,167	65	0,250883
15,714	532,3	532,9	100,41	100,43	0,175	0,167	66	0,2488523
15,801	532,4	532,9	99,29	99,86	0,175	0,167	67	0,250276
15,894	532,4	533,0	98,87	99,57	0,174	0,167	68	0,2516909
15,813	532,4	533,0	99,28	99,93	0,174	0,167	69	0,250277
15,814	532,4	533,0	99,64	100,01	0,174	0,167	70	0,2502772
15,794	532,5	533,1	100,04	100,10	0,175	0,167	71	0,2499763
15,781	532,5	533,1	99,57	100,32	0,175	0,167	72	0,2498712
15,749	532,5	533,1	100,02	100,30	0,175	0,167	73	0,2492616
15,722	532,5	533,1	100,16	100,34	0,175	0,167	74	0,2488552
15,851	532,5	533,1	99,13	99,71	0,174	0,167	75	0,2508851
15,790	532,5	533,2	99,32	100,07	0,174	0,167	76	0,2498722
15,784	532,6	533,2	99,69	100,21	0,174	0,167	77	0,2498722
15,809	532,6	533,2	99,47	99,87	0,175	0,167	78	0,250279
15,852	532,6	533,2	99,52	99,94	0,175	0,167	79	0,2509548
15,850	532,7	533,3	99,60	99,29	0,175	0,167	80	0,2508861
15,660	532,7	533,3	100,46	100,85	0,175	0,167	81	0,2478337
15,879	532,7	533,4	99,03	99,39	0,174	0,167	82	0,2512913
15,749	532,8	533,4	99,67	100,38	0,174	0,167	83	0,2492631
15,751	532,8	533,4	99,61	100,57	0,174	0,167	84	0,2492632
15,725	532,8	533,4	99,85	100,61	0,174	0,167	85	0,2488554
15,785	532,8	533,4	99,63	100,06	0,174	0,167	86	0,2498729
15,723	532,8	533,5	100,16	100,55	0,175	0,167	87	0,2488654
15,744	532,8	533,5	99,90	100,17	0,175	0,167	88	0,2492634
15,813	532,8	533,5	99,39	99,40	0,174	0,167	89	0,25028
15,856	532,9	533,5	99,17	99,76	0,174	0,167	90	0,2508867
15,818	532,9	533,6	99,40	99,90	0,174	0,167	91	0,2502796
15,855	533,0	533,6	99,15	99,94	0,174	0,167	92	0,2508866
15,855	532,9	533,6	99,59	99,80	0,175	0,167	93	0,2508872
15,847	533,0	533,6	99,04	99,40	0,175	0,167	94	0,2508876
15,722	532,9	533,6	100,08	100,10	0,174	0,167	95	0,2488571
15,729	533,0	533,6	99,81	100,25	0,174	0,167	96	0,2488573
15,754	533,0	533,6	99,89	100,26	0,174	0,167	97	0,2492642
15,819	533,0	533,7	99,39	99,96	0,174	0,167	98	0,2502803
15,696	533,1	533,7	99,96	100,60	0,174	0,167	99	0,2484489
15,851	533,1	533,8	99,14	100,06	0,174	0,167	100	0,2508547
15,729	533,2	533,8	100,04	100,43	0,174	0,167	101	0,2488577
15,706	533,2	533,8	100,28	100,45	0,174	0,167	102	0,2484489
15,819	533,2	533,9	99,24	99,66	0,174	0,167	103	0,2502808
15,731	533,2	533,9	100,09	100,14	0,174	0,167	104	0,2488582
15,734	533,1	533,8	99,81	100,25	0,174	0,167	105	0,2488583
15,733	533,1	533,8	99,73	100,52	0,174	0,167	106	0,2488584
15,822	533,1	533,8	99,52	100,16	0,174	0,167	107	0,2502816
15,703	533,1	533,8	100,14	100,66	0,174	0,167	108	0,2484496
15,865	533,2	533,9	99,41	99,56	0,174	0,167	109	0,2508888
15,736	533,2	533,9	100,13	100,01	0,175	0,166	110	0,2488585
15,756	533,3	533,9	99,95	100,37	0,174	0,167	111	0,2492661
15,706	533,3	534,0	100,06	100,19	0,174	0,167	112	0,24845
15,736	533,4	534,1	100,07	100,45	0,174	0,167	113	0,2488592
15,800	533,5	534,2	99,49	99,74	0,174	0,167	114	0,2498771
15,869	533,6	534,2	99,20	99,45	0,174	0,166	115	0,25089
15,911	533,6	534,3	98,92	99,09	0,174	0,167	116	0,2516984
15,805	533,7	534,3	99,46	100,02	0,174	0,167	117	0,2498773
15,824	533,7	534,4	99,05	99,68	0,174	0,167	118	0,2502838
15,893	533,8	534,5	98,99	99,22	0,174	0,166	119	0,2512961
15,827	533,8	534,5	99,26	99,77	0,174	0,167	120	0,2502847
15,829	533,8	534,5	99,39	100,17	0,174	0,167	121	0,2502851
15,744	533,9	534,6	100,10	100,09	0,174	0,167	122	0,2488623
15,837	533,9	534,6	99,45	99,52	0,174	0,166	123	0,2502859
15,876	534,0	534,7	99,21	99,53	0,174	0,166	124	0,2508935
15,902	534,0	534,7	98,93	99,26	0,174	0,166	125	0,2512982
15,846	534,0	534,7	99,47	99,92	0,174	0,167	126	0,2502864
15,846	534,0	534,7	99,39	100,00	0,174	0,167	127	0,2502868
15,762	534,0	534,7	100,04	100,49	0,174	0,167	128	0,2489108
15,912	534,0	534,8	98,79	99,52	0,174	0,167	129	0,2512987

15,890	534,1	534,8	99,11	99,59	0,174	0,167	130	0,2508941
15,890	534,2	534,9	99,09	99,64	0,174	0,167	131	0,2508948
15,760	534,3	535,0	99,96	99,99	0,174	0,166	132	0,248864
15,691	534,3	535,0	100,30	100,62	0,174	0,166	133	0,2478425
15,915	534,3	535,0	98,95	99,45	0,174	0,166	134	0,2512998
15,825	534,3	535,0	99,95	100,08	0,174	0,167	135	0,2498817
15,920	534,3	535,1	98,93	99,30	0,174	0,166	136	0,2512989
15,832	534,3	535,1	99,69	99,67	0,174	0,166	137	0,2498815
15,799	534,4	535,1	99,66	99,84	0,174	0,166	138	0,2492722
15,892	534,4	535,1	99,19	99,28	0,174	0,166	139	0,2508961
15,836	534,5	535,2	99,53	99,54	0,174	0,166	140	0,2498827
15,921	534,6	535,2	98,83	99,29	0,174	0,166	141	0,2513008
15,864	534,6	535,3	99,38	99,64	0,174	0,166	142	0,250311
15,926	534,6	535,3	99,06	99,18	0,174	0,166	143	0,2513005
15,904	534,6	535,3	99,29	99,74	0,174	0,166	144	0,2508968
15,907	534,7	535,4	99,01	99,00	0,174	0,166	145	0,2508962
15,843	534,8	535,5	99,68	99,59	0,174	0,166	146	0,2498838
15,904	534,8	535,5	98,94	99,26	0,174	0,166	147	0,2508972
15,900	534,8	535,5	98,86	99,40	0,173	0,166	148	0,2508978
15,867	534,8	535,6	99,49	99,65	0,174	0,166	149	0,2502906
15,782	534,8	535,6	99,99	100,23	0,174	0,166	150	0,2488676
15,868	534,8	535,6	99,60	99,73	0,174	0,166	151	0,2502904
15,904	534,9	535,6	99,26	99,30	0,174	0,166	152	0,2508984
15,962	534,9	535,6	99,01	98,83	0,174	0,166	153	0,2517056
15,910	534,9	535,7	99,09	99,29	0,174	0,166	154	0,2508986
15,875	534,9	535,7	99,52	99,36	0,174	0,166	155	0,2502908
15,910	535,0	535,8	99,09	99,08	0,174	0,165	156	0,2508977
15,780	535,0	535,8	99,98	99,94	0,174	0,166	157	0,2488676
15,847	535,0	535,8	99,68	99,71	0,174	0,166	158	0,2498845
15,786	535,0	535,9	99,77	100,29	0,174	0,166	159	0,2488682
15,917	535,0	535,9	99,09	99,23	0,173	0,166	160	0,2508989
15,851	535,2	536,0	99,30	99,44	0,173	0,165	161	0,2498857
15,788	535,2	536,0	99,86	100,21	0,173	0,166	162	0,2488682
15,852	535,2	536,0	99,69	99,57	0,174	0,166	163	0,2498842
15,914	535,3	536,1	99,16	99,14	0,174	0,166	164	0,2508994
15,825	535,3	536,1	99,82	99,95	0,174	0,166	165	0,2494603
15,819	535,2	536,0	99,78	100,07	0,174	0,166	166	0,2492753
15,815	535,2	536,1	99,86	99,82	0,174	0,166	167	0,2492753
15,789	535,3	536,1	99,88	99,93	0,174	0,166	168	0,2488689
15,916	535,4	536,2	98,95	99,27	0,173	0,166	169	0,2508984
15,788	535,4	536,3	100,12	100,01	0,174	0,166	170	0,2488678
15,761	535,4	536,3	100,17	100,08	0,174	0,166	171	0,2484595
15,818	535,5	536,3	100,14	100,25	0,174	0,166	172	0,2492751
15,877	535,4	536,3	99,19	99,38	0,174	0,166	173	0,2502913
15,762	535,4	536,3	100,05	100,03	0,173	0,165	174	0,2484598
15,761	535,4	536,3	99,83	99,99	0,173	0,165	175	0,2484594
15,791	535,4	536,3	100,05	99,88	0,173	0,165	176	0,2488684
15,758	535,4	536,3	100,47	100,07	0,174	0,165	177	0,2484596
15,766	535,4	536,4	100,05	100,21	0,174	0,166	178	0,248459
15,666	535,4	536,4	100,89	100,92	0,174	0,166	179	0,2468367
15,822	535,5	536,4	99,89	100,10	0,174	0,166	180	0,2492747
15,823	535,5	536,4	99,67	100,01	0,173	0,166	181	0,2492748
15,767	535,5	536,4	99,75	100,07	0,173	0,166	182	0,2484596
15,787	535,5	536,4	99,97	99,51	0,173	0,165	183	0,248868
15,616	535,7	536,5	101,10	101,19	0,174	0,165	184	0,2460235
15,889	535,7	536,6	99,70	99,47	0,174	0,166	185	0,2502917
15,890	535,6	536,6	99,77	99,48	0,174	0,166	186	0,2502923
15,861	535,7	536,6	99,52	99,52	0,174	0,165	187	0,2498857
15,799	535,7	536,6	99,91	99,72	0,173	0,165	188	0,2488681
15,893	535,7	536,6	99,22	99,21	0,173	0,165	189	0,2502917
15,778	535,7	536,6	99,89	100,11	0,173	0,165	190	0,2484599
15,936	535,7	536,6	99,01	98,86	0,173	0,165	191	0,2508995
15,838	535,8	536,7	99,90	99,79	0,173	0,165	192	0,2492753
15,805	535,8	536,7	100,12	99,94	0,174	0,165	193	0,2488687
15,831	535,8	536,7	99,89	99,82	0,174	0,165	194	0,2492762
15,834	535,8	536,7	99,77	100,21	0,173	0,166	195	0,2492768
15,905	535,9	536,8	99,39	99,73	0,173	0,166	196	0,2502926
15,786	535,9	536,8	100,10	99,95	0,173	0,165	197	0,2484611
15,815	535,9	536,8	99,95	99,96	0,173	0,165	198	0,2488696

15,751	536,0	536,8	100,82	100,64	0,174	0,165	199	0,2478423
15,823	536,0	536,9	99,95	99,98	0,174	0,165	200	0,2488699
16,006	536,0	536,9	99,03	98,87	0,173	0,165	201	0,2517083
15,849	536,0	536,9	99,66	99,84	0,173	0,165	202	0,2492775
15,890	536,1	537,0	99,67	99,91	0,173	0,165	203	0,2498873
15,953	536,1	537,0	99,16	99,02	0,173	0,165	204	0,2509012
15,848	536,1	537,0	99,68	100,03	0,173	0,165	205	0,2492782
15,799	536,1	537,0	100,16	99,99	0,173	0,165	206	0,248468
15,825	536,2	537,0	100,07	100,13	0,173	0,165	207	0,2488711
15,888	536,2	537,1	99,67	99,46	0,173	0,165	208	0,2499354
15,893	536,2	537,1	99,46	99,95	0,173	0,165	209	0,2498878
15,895	536,2	537,1	99,73	99,37	0,173	0,165	210	0,2498879
15,808	536,2	537,1	100,02	100,35	0,173	0,165	211	0,2484622
15,863	536,2	537,2	99,64	99,91	0,173	0,165	212	0,2492776
15,813	536,3	537,3	100,34	99,94	0,173	0,165	213	0,2484614
15,641	536,4	537,3	101,29	101,12	0,173	0,165	214	0,2457936
15,826	536,4	537,4	100,30	100,28	0,173	0,165	215	0,2487152
15,772	536,4	537,4	100,57	100,28	0,173	0,165	216	0,2478491
15,801	536,5	537,5	100,28	100,11	0,173	0,165	217	0,2484624
15,854	536,5	537,5	99,72	99,98	0,173	0,165	218	0,2492778
15,738	536,6	537,6	100,63	100,45	0,173	0,165	219	0,2474394
15,767	536,6	537,6	100,32	100,11	0,173	0,165	220	0,2478489
15,864	536,7	537,6	99,87	99,67	0,173	0,165	221	0,2492784
15,925	536,7	537,6	99,55	99,34	0,173	0,165	222	0,2502943
15,904	536,6	537,6	99,53	99,69	0,173	0,165	223	0,2498884
15,908	536,7	537,6	99,35	99,74	0,173	0,165	224	0,2498889
15,780	536,7	537,6	100,49	100,51	0,173	0,165	225	0,2478499
15,778	536,7	537,6	100,40	100,30	0,173	0,165	226	0,2478499
15,910	536,7	537,7	99,58	99,45	0,173	0,165	227	0,2498886
15,871	536,8	537,8	100,26	99,65	0,173	0,165	228	0,2492788
15,860	536,8	537,8	99,69	99,55	0,173	0,165	229	0,2492798
15,876	536,8	537,8	99,99	99,94	0,173	0,165	230	0,2492791
15,848	536,9	537,9	99,82	100,01	0,173	0,165	231	0,2488718
15,818	536,9	537,9	100,21	100,21	0,173	0,165	232	0,2484626
15,778	537,0	537,9	100,33	100,17	0,173	0,165	233	0,2478503
15,911	537,0	538,0	99,43	99,70	0,173	0,165	234	0,2498892
15,870	537,0	538,0	99,79	99,43	0,173	0,165	235	0,2492801
15,919	537,0	538,1	99,50	99,29	0,173	0,165	236	0,2501157
15,746	537,0	538,1	100,62	100,44	0,173	0,165	237	0,2474397
15,902	537,0	538,1	99,92	99,46	0,173	0,165	238	0,2498891
15,705	537,0	538,0	100,66	100,79	0,173	0,165	239	0,2468239
15,710	537,0	538,0	100,90	100,73	0,173	0,165	240	0,2468236
15,809	536,9	538,0	99,90	99,65	0,173	0,165	241	0,2484623
15,739	537,0	538,0	100,52	100,27	0,173	0,164	242	0,2474388
15,739	536,9	538,0	100,42	100,26	0,173	0,165	243	0,2474383
15,739	537,0	538,0	100,32	100,42	0,173	0,165	244	0,2474376
15,736	536,9	538,0	100,44	100,66	0,173	0,165	245	0,2474374
15,793	537,0	538,0	100,04	99,67	0,173	0,165	246	0,248461
15,795	537,1	538,1	100,10	99,70	0,173	0,164	247	0,2484612
15,723	537,2	538,2	100,16	99,92	0,173	0,164	248	0,2474376
15,728	537,2	538,2	100,46	100,08	0,173	0,164	249	0,2474372
15,810	537,2	538,1	99,52	99,39	0,173	0,164	250	0,2488698
15,788	537,1	538,1	99,65	99,98	0,173	0,165	251	0,2484609
15,716	537,1	538,1	100,39	100,47	0,173	0,165	252	0,2474379
15,827	537,1	538,1	99,52	99,28	0,173	0,165	253	0,2492759
15,806	537,1	538,1	99,92	99,69	0,173	0,165	254	0,2488693
15,741	537,2	538,2	100,23	99,83	0,173	0,165	255	0,2478475
15,863	537,2	538,2	99,41	99,18	0,173	0,165	256	0,2498867
15,827	537,1	538,1	99,45	99,15	0,173	0,165	257	0,2492769
15,861	537,1	538,1	99,34	99,13	0,173	0,165	258	0,2498868
15,774	537,1	538,1	99,79	99,81	0,173	0,165	259	0,2484609
15,798	537,1	538,1	99,71	99,39	0,173	0,165	260	0,2488697
15,700	537,0	538,0	100,36	100,13	0,173	0,165	261	0,2474375
15,732	536,9	538,0	100,03	99,76	0,173	0,165	262	0,2478481
15,854	536,9	538,0	98,97	99,12	0,173	0,165	263	0,2498862
15,854	537,0	538,0	99,27	98,72	0,173	0,164	264	0,2498865
15,855	536,9	538,0	99,21	99,01	0,173	0,164	265	0,2498857
15,818	536,9	538,0	99,46	99,44	0,173	0,165	266	0,2492763
15,781	536,9	537,9	100,00	99,78	0,173	0,165	267	0,2488688

15,807	536,8	537,9	99,35	99,33	0,173	0,165	268	0,2492758
15,782	536,8	537,8	99,73	99,57	0,173	0,165	269	0,2488685
15,846	536,9	537,8	99,01	99,00	0,173	0,165	270	0,2498858
15,801	536,8	537,8	99,47	99,49	0,173	0,165	271	0,2492751
15,775	536,8	537,8	99,53	99,40	0,173	0,165	272	0,2488687
15,794	536,8	537,8	99,22	99,00	0,173	0,165	273	0,2492753
15,861	536,8	537,8	98,98	99,04	0,173	0,165	274	0,250292
15,771	536,8	537,8	99,61	99,35	0,173	0,165	275	0,2488684
15,797	536,8	537,8	99,51	99,28	0,173	0,165	276	0,2492755
15,833	536,8	537,8	98,97	98,92	0,173	0,165	277	0,2498855
15,837	536,8	537,9	99,26	99,16	0,173	0,165	278	0,2498849
15,797	536,9	537,9	99,18	99,17	0,173	0,165	279	0,2492757
15,859	536,8	537,9	98,70	98,82	0,173	0,165	280	0,250292
15,916	536,8	537,8	98,63	98,23	0,173	0,165	281	0,2513034
15,788	536,7	537,7	99,34	99,21	0,173	0,165	282	0,2492751
15,850	536,7	537,6	99,15	99,09	0,173	0,165	283	0,2502919
15,786	536,6	537,6	99,47	99,50	0,173	0,165	284	0,2492749
15,735	536,7	537,6	99,84	99,58	0,173	0,165	285	0,2484594
15,829	536,7	537,6	99,06	98,99	0,173	0,165	286	0,2498847
15,853	536,7	537,7	99,05	98,85	0,173	0,165	287	0,2502915
15,789	536,7	537,6	99,31	99,38	0,173	0,165	288	0,2492751
15,888	536,6	537,6	98,75	98,58	0,173	0,165	289	0,2508981
15,696	536,5	537,5	100,07	100,00	0,173	0,165	290	0,2478469
15,783	536,5	537,4	99,16	99,18	0,173	0,165	291	0,2492742
15,734	536,5	537,4	99,62	99,25	0,173	0,165	292	0,2484588
15,822	536,5	537,4	98,88	98,78	0,173	0,164	293	0,249884
15,783	536,4	537,4	99,27	98,91	0,173	0,164	294	0,249274
15,820	536,5	537,4	99,26	99,34	0,173	0,165	295	0,2498834
15,780	536,4	537,4	99,40	99,19	0,173	0,165	296	0,2492738
15,774	536,5	537,4	99,42	99,50	0,173	0,165	297	0,2492738
15,774	536,5	537,5	99,26	98,94	0,173	0,165	298	0,2492732
15,715	536,4	537,4	99,66	99,30	0,173	0,165	299	0,2484572
15,773	536,4	537,4	99,26	98,86	0,173	0,165	300	0,2492727
15,726	536,4	537,3	99,52	99,21	0,173	0,164	301	0,2484574
15,873	536,4	537,4	98,86	98,56	0,173	0,165	302	0,2508957
15,770	536,4	537,3	99,40	99,27	0,173	0,165	303	0,2492727
15,720	536,4	537,3	100,00	99,61	0,174	0,165	304	0,248457
15,870	536,3	537,2	98,51	98,81	0,173	0,165	305	0,2508956
15,917	536,3	537,2	98,28	98,26	0,173	0,165	306	0,2517033
15,828	536,4	537,3	98,63	98,61	0,173	0,165	307	0,2502887
15,830	536,3	537,2	99,01	98,64	0,173	0,165	308	0,2502885
15,894	536,3	537,2	98,91	98,34	0,174	0,165	309	0,2513001
15,914	536,2	537,1	98,26	98,22	0,174	0,165	310	0,2517033
15,801	536,2	537,1	99,16	98,87	0,173	0,165	311	0,249882
15,827	536,1	537,0	99,00	98,69	0,173	0,165	312	0,2502884
15,830	536,1	537,0	98,80	98,61	0,173	0,165	313	0,2502879
15,831	536,1	537,0	98,59	98,68	0,173	0,165	314	0,2502883
15,757	536,1	537,0	99,34	98,96	0,173	0,165	315	0,2492721
15,862	536,1	537,0	98,66	98,66	0,173	0,165	316	0,2508953
15,860	536,1	537,0	98,96	98,65	0,174	0,165	317	0,2508951
15,734	536,1	536,9	99,85	99,68	0,174	0,165	318	0,2488646
15,877	536,0	536,8	98,45	98,27	0,174	0,165	319	0,2512994
15,856	536,0	536,8	98,60	98,49	0,173	0,165	320	0,2508947
15,814	536,0	536,8	98,67	98,58	0,173	0,165	321	0,2502872
15,711	535,9	536,8	99,41	99,49	0,173	0,165	322	0,2484556
15,822	536,0	536,8	98,74	98,67	0,173	0,165	323	0,2502875
15,914	535,9	536,7	98,42	98,32	0,173	0,165	324	0,2517023
15,756	535,9	536,7	99,47	99,18	0,174	0,165	325	0,2492711
15,760	535,9	536,7	99,43	99,56	0,174	0,165	326	0,2492711
15,913	535,9	536,7	98,32	98,27	0,173	0,165	327	0,2517019
15,756	535,9	536,6	99,27	98,89	0,173	0,165	328	0,2492707
15,732	535,9	536,6	99,44	99,25	0,173	0,165	329	0,248864
15,859	535,9	536,6	98,63	98,58	0,173	0,165	330	0,2508941
15,881	535,9	536,6	98,89	98,18	0,174	0,165	331	0,2512988
15,809	535,8	536,6	98,76	98,86	0,174	0,165	332	0,2502865
15,876	535,8	536,6	98,59	98,32	0,173	0,165	333	0,2512986
15,730	535,7	536,5	99,26	99,45	0,173	0,165	334	0,2489153
15,904	535,7	536,5	98,39	98,21	0,173	0,165	335	0,2517013
15,791	535,7	536,5	99,03	98,92	0,173	0,165	336	0,24988

15,903	535,7	536,5	98,19	98,02	0,173	0,165	337	0,2517014
15,855	535,7	536,5	98,66	98,26	0,173	0,165	338	0,2508931
15,816	535,8	536,6	98,95	98,63	0,173	0,165	339	0,2502867
15,754	535,8	536,6	99,43	99,18	0,174	0,165	340	0,2492711
15,854	535,8	536,6	98,49	98,45	0,173	0,165	341	0,2508936
15,817	535,8	536,6	99,00	98,74	0,173	0,165	342	0,2502865
15,854	535,8	536,6	98,45	98,14	0,173	0,165	343	0,2508933
15,784	535,8	536,6	98,74	98,68	0,173	0,165	344	0,2498803
15,879	535,8	536,7	98,58	98,21	0,173	0,165	345	0,251299
15,816	535,9	536,7	98,88	98,68	0,173	0,165	346	0,2502865
15,853	535,8	536,7	98,89	98,60	0,174	0,165	347	0,2508488
15,876	535,8	536,6	98,60	98,43	0,174	0,165	348	0,2512986
15,877	535,7	536,6	98,65	98,60	0,174	0,165	349	0,2512983
15,877	535,7	536,6	98,42	98,17	0,173	0,165	350	0,2512998
15,850	535,7	536,6	98,74	98,21	0,173	0,165	351	0,2508945
15,902	535,7	536,6	98,28	98,32	0,173	0,165	352	0,251702
15,855	535,6	536,5	98,72	98,60	0,173	0,165	353	0,2508945
15,906	535,6	536,6	98,51	98,22	0,174	0,165	354	0,251702
15,903	535,7	536,6	98,28	98,01	0,173	0,165	355	0,2517011
15,856	535,7	536,6	98,41	98,58	0,173	0,165	356	0,2508938
15,852	535,7	536,6	98,71	98,45	0,173	0,165	357	0,250894
15,748	535,7	536,6	99,23	99,11	0,173	0,165	358	0,2492708
15,904	535,7	536,6	98,40	98,13	0,173	0,165	359	0,2517019
15,877	535,8	536,7	98,65	98,37	0,174	0,165	360	0,2512988
15,966	535,8	536,7	98,00	97,78	0,174	0,165	361	0,2527091
16,001	535,7	536,7	97,77	97,72	0,174	0,165	362	0,2533106
15,694	535,7	536,6	99,56	99,51	0,173	0,165	363	0,2484567
15,826	535,7	536,6	98,81	98,50	0,173	0,165	364	0,2505783
15,856	535,7	536,6	98,66	98,69	0,173	0,165	365	0,2508945
15,874	535,7	536,6	98,54	98,23	0,173	0,165	366	0,2512993
15,898	535,6	536,5	98,10	98,17	0,173	0,165	367	0,2517021
15,749	535,6	536,5	99,23	99,25	0,173	0,165	368	0,2492711
15,817	535,7	536,6	98,84	98,57	0,173	0,165	369	0,2502872
15,853	535,7	536,6	98,67	98,61	0,173	0,165	370	0,2508938
15,854	535,7	536,6	98,63	98,50	0,173	0,165	371	0,2508942
15,855	535,7	536,6	98,63	98,66	0,173	0,165	372	0,2508944
15,851	535,7	536,5	99,05	98,28	0,174	0,165	373	0,2508938
15,739	535,7	536,5	99,15	99,07	0,174	0,165	374	0,2492709
15,844	535,6	536,5	98,73	98,51	0,173	0,165	375	0,2508942
15,898	535,6	536,5	98,13	98,34	0,173	0,165	376	0,2517019
15,847	535,6	536,5	98,69	98,58	0,173	0,165	377	0,2508937
15,901	535,6	536,5	98,29	98,13	0,173	0,165	378	0,2517018
15,965	535,6	536,5	97,80	97,87	0,173	0,165	379	0,2527082
15,870	535,6	536,5	98,46	98,35	0,173	0,165	380	0,2512987
15,849	535,6	536,5	98,71	98,16	0,173	0,165	381	0,2509049
15,874	535,6	536,5	98,61	98,12	0,174	0,165	382	0,2512985
15,776	535,6	536,5	98,84	99,01	0,173	0,165	383	0,2498799
15,776	535,6	536,5	99,12	98,79	0,173	0,165	384	0,2498801
15,891	535,6	536,5	98,08	97,92	0,173	0,165	385	0,2517012
15,782	535,6	536,4	98,76	98,90	0,173	0,165	386	0,2498796
15,749	535,6	536,4	99,41	99,37	0,173	0,165	387	0,2492701
15,805	535,6	536,4	98,85	98,27	0,174	0,165	388	0,2502861
15,872	535,7	536,5	98,67	98,18	0,174	0,165	389	0,251298
15,789	535,6	536,4	99,15	98,74	0,174	0,165	390	0,2499422
15,718	535,6	536,4	99,60	99,21	0,174	0,165	391	0,2488623
15,872	535,5	536,4	98,43	98,27	0,174	0,165	392	0,2512975
15,817	535,5	536,3	99,06	98,76	0,174	0,165	393	0,2502857
15,878	535,4	536,3	98,49	98,35	0,174	0,165	394	0,2512971
15,880	535,5	536,3	98,59	98,27	0,173	0,165	395	0,2512971
15,878	535,5	536,3	98,66	98,16	0,174	0,165	396	0,2512968
15,747	535,5	536,3	99,11	99,31	0,173	0,165	397	0,2492692
15,847	535,5	536,3	98,58	98,72	0,173	0,165	398	0,2508921
15,782	535,4	536,3	98,83	99,03	0,173	0,165	399	0,2498788

Average	Average	Average						Average
16,45	Inlet +	Inlet +						0,258
	Outlet	Outlet	Average	Average	#1	#2		
Tunnel	Temp.	Temp.	99,80	99,28	System 1	System 2		SQRT
Velocity	Meter 1	Meter 2	**Proportional Rates**		Vol.Std.	Vol.Std.		Delta-P
			PR1	**PR2**			Time	
Ft/Sec	Deg. R	Deg. R	**%**	**%**	(ft3)	(ft3)	min	(in H2O)2
15,683	533,9	534,3			0,171	0,098	0	0,2396241
16,286	534,1	534,4	104,32	103,53	0,171	0,130	1	0,251284
16,228	534,1	534,4	103,95	103,23	0,170	0,161	2	0,2515505
16,375	534,1	534,4	102,00	101,55	0,170	0,162	3	0,2546942
16,129	534,1	534,4	103,48	102,87	0,170	0,162	4	0,2512678
16,433	534,2	534,4	100,60	99,92	0,170	0,162	5	0,257074
16,339	534,1	534,4	100,71	100,11	0,170	0,161	6	0,2560857
16,407	534,1	534,4	100,19	99,50	0,170	0,161	7	0,2574692
16,327	534,0	534,4	100,86	100,29	0,170	0,162	8	0,2560857
16,207	534,0	534,4	101,74	101,53	0,170	0,162	9	0,2541253
16,404	534,0	534,4	100,03	99,35	0,170	0,162	10	0,2574691
16,430	534,0	534,4	100,00	99,08	0,170	0,161	11	0,2580594
16,422	534,0	534,4	99,65	99,30	0,170	0,162	12	0,2580595
16,242	534,0	534,4	100,79	100,44	0,170	0,162	13	0,2550932
16,473	534,0	534,4	99,96	99,13	0,170	0,162	14	0,2584531
16,394	534,1	534,4	100,12	99,55	0,170	0,162	15	0,2574694
16,365	534,1	534,4	100,47	99,74	0,170	0,162	16	0,2570743
16,202	534,0	534,4	101,25	100,67	0,171	0,162	17	0,2546948
16,175	534,0	534,4	101,60	100,68	0,171	0,162	18	0,2540941
16,471	534,0	534,4	99,76	99,09	0,170	0,161	19	0,2584535
16,330	534,1	534,5	100,59	99,71	0,170	0,161	20	0,2564818
16,445	534,2	534,5	99,60	99,09	0,170	0,162	21	0,2584535
16,350	534,1	534,5	100,19	99,49	0,170	0,162	22	0,2570743
16,282	534,1	534,5	100,66	100,26	0,170	0,162	23	0,2560786
16,378	534,1	534,5	100,10	99,38	0,170	0,162	24	0,2572705
16,387	534,1	534,5	99,79	99,33	0,170	0,161	25	0,25747
16,293	534,1	534,5	100,61	99,85	0,170	0,161	26	0,2560866
16,309	534,0	534,5	100,34	99,62	0,170	0,161	27	0,2564822
16,212	534,0	534,4	100,83	99,85	0,170	0,161	28	0,2550935
16,391	534,0	534,4	100,44	99,19	0,171	0,161	29	0,2575913
16,332	534,0	534,4	100,43	99,93	0,171	0,162	30	0,256482
16,293	534,1	534,5	100,69	99,95	0,170	0,162	31	0,2560859
16,352	534,1	534,5	99,97	99,67	0,170	0,162	32	0,2570742
16,367	534,1	534,5	100,00	99,37	0,170	0,162	33	0,2574696
16,360	534,2	534,6	100,15	99,29	0,170	0,161	34	0,2570745
16,378	534,2	534,6	100,16	99,66	0,170	0,161	35	0,2570746
16,056	534,2	534,6	102,09	101,40	0,170	0,162	36	0,2522922
16,226	534,2	534,6	100,99	100,25	0,170	0,162	37	0,2550934
16,189	534,1	534,5	101,15	100,33	0,170	0,162	38	0,2546946
16,440	534,1	534,5	99,48	99,11	0,170	0,162	39	0,2584533
16,399	534,1	534,5	100,27	99,50	0,170	0,162	40	0,2574699
16,453	534,1	534,5	99,51	98,67	0,170	0,161	41	0,2584532
16,318	534,1	534,5	100,14	99,57	0,170	0,161	42	0,2564821
16,199	534,1	534,5	101,19	100,50	0,170	0,161	43	0,2546949
16,309	534,1	534,5	100,36	99,52	0,170	0,161	44	0,2564819
16,327	534,0	534,5	100,70	99,89	0,171	0,161	45	0,2564812
16,362	534,1	534,5	100,39	99,58	0,171	0,162	46	0,2570338
16,294	534,1	534,5	100,75	100,06	0,171	0,162	47	0,256086
16,311	534,1	534,5	100,31	99,66	0,170	0,162	48	0,2564812
16,366	534,1	534,5	100,06	99,07	0,170	0,161	49	0,2574688
16,362	534,0	534,4	100,19	99,29	0,170	0,161	50	0,2570737
16,248	534,1	534,5	101,13	100,56	0,170	0,161	51	0,255093
16,359	534,1	534,5	100,33	99,52	0,170	0,162	52	0,2570741
16,332	534,1	534,5	100,06	99,79	0,170	0,162	53	0,2567787
16,303	534,1	534,5	100,24	99,75	0,170	0,162	54	0,256481
16,314	534,1	534,4	100,16	99,75	0,170	0,162	55	0,2564808
16,310	534,0	534,4	100,60	100,27	0,170	0,162	56	0,2560854
16,323	534,1	534,5	100,60	99,64	0,170	0,162	57	0,2564809
16,383	534,2	534,5	100,09	99,41	0,170	0,161	58	0,2574688
16,374	534,1	534,5	100,11	99,45	0,170	0,162	59	0,2574699
16,348	534,1	534,5	100,10	99,62	0,170	0,162	60	0,2570737

16,331	534,1	534,5	100,57	99,66	0,170	0,162	61	0,2564808
16,338	534,2	534,5	100,47	99,87	0,170	0,161	62	0,256481
16,090	534,3	534,6	101,82	101,05	0,170	0,161	63	0,2526947
16,360	534,3	534,6	100,39	99,48	0,170	0,161	64	0,2570741
16,137	534,2	534,6	101,57	100,76	0,171	0,161	65	0,2536966
16,305	534,2	534,5	101,01	99,74	0,171	0,161	66	0,2560856
16,235	534,2	534,5	101,15	100,81	0,170	0,161	67	0,2546942
16,338	534,3	534,6	100,48	99,77	0,170	0,162	68	0,2564812
16,371	534,3	534,7	100,00	99,53	0,170	0,161	69	0,2570746
16,394	534,3	534,7	100,19	99,32	0,170	0,161	70	0,2574692
16,395	534,4	534,7	100,50	99,24	0,171	0,161	71	0,2574697
16,410	534,3	534,7	100,12	99,35	0,171	0,161	72	0,2574699
16,349	534,4	534,8	100,67	100,03	0,170	0,161	73	0,2564823
16,411	534,5	534,9	100,24	99,56	0,170	0,162	74	0,2574698
16,316	534,5	534,9	100,51	100,25	0,170	0,162	75	0,2560861
16,312	534,5	534,9	100,27	99,86	0,170	0,162	76	0,2560864
16,196	534,5	534,9	101,55	101,14	0,170	0,162	77	0,2540963
16,275	534,6	534,9	101,18	100,48	0,170	0,162	78	0,2550938
16,416	534,7	535,0	100,49	99,44	0,170	0,161	79	0,25747
16,325	534,7	535,0	101,07	99,96	0,171	0,161	80	0,2560865
16,540	534,7	535,0	99,39	98,54	0,170	0,161	81	0,259433
16,178	534,7	535,0	101,62	101,05	0,170	0,161	82	0,2536972
16,375	534,7	535,0	100,49	100,08	0,170	0,162	83	0,2564819
16,433	534,8	535,1	99,98	99,37	0,170	0,161	84	0,2574702
16,219	534,9	535,1	101,39	100,79	0,170	0,161	85	0,2540964
16,341	534,9	535,2	100,78	99,82	0,170	0,161	86	0,2560859
16,397	534,9	535,2	100,47	99,30	0,170	0,161	87	0,2570747
16,498	534,9	535,2	99,95	99,36	0,170	0,161	88	0,2584531
16,452	534,9	535,2	100,27	100,08	0,170	0,162	89	0,2574705
16,381	535,0	535,3	100,60	100,19	0,170	0,162	90	0,2564813
16,348	535,0	535,3	100,81	100,53	0,170	0,162	91	0,2559563
16,501	535,0	535,4	99,80	98,93	0,170	0,161	92	0,2584538
16,590	535,0	535,4	99,72	98,54	0,170	0,161	93	0,2598245
16,460	535,0	535,4	100,25	99,56	0,170	0,161	94	0,2574702
16,389	535,2	535,5	100,77	100,08	0,170	0,161	95	0,2564827
16,301	535,2	535,5	101,00	100,78	0,170	0,161	96	0,2550948
16,299	535,3	535,6	101,23	100,57	0,170	0,161	97	0,2550945
16,291	535,3	535,6	101,07	100,63	0,170	0,161	98	0,2550946
16,429	535,4	535,7	100,24	99,95	0,170	0,162	99	0,2570749
16,593	535,4	535,7	99,55	98,79	0,170	0,161	100	0,2594335
16,433	535,5	535,8	100,46	99,47	0,170	0,161	101	0,2570759
16,434	535,5	535,8	100,52	99,73	0,170	0,161	102	0,2570757
16,368	535,6	535,8	100,60	100,19	0,170	0,161	103	0,256088
16,422	535,6	535,9	100,43	99,75	0,170	0,161	104	0,2570759
16,529	535,6	535,9	99,69	99,44	0,170	0,161	105	0,2584544
16,376	535,7	536,1	100,51	100,00	0,169	0,161	106	0,2560879
16,366	535,8	536,2	100,94	99,88	0,170	0,161	107	0,2559064
16,466	535,9	536,2	100,22	99,27	0,170	0,161	108	0,257472
16,283	536,0	536,3	101,48	100,80	0,170	0,161	109	0,2546969
16,525	536,0	536,4	99,92	99,16	0,170	0,161	110	0,2584568
16,478	536,0	536,4	100,43	99,41	0,170	0,161	111	0,2574729
16,475	536,2	536,5	100,15	99,67	0,170	0,161	112	0,2574729
16,329	536,3	536,6	101,27	100,44	0,170	0,161	113	0,255097
16,546	536,4	536,7	99,79	99,10	0,170	0,161	114	0,2584572
16,415	536,4	536,7	100,62	99,77	0,170	0,161	115	0,256486
16,542	536,4	536,8	99,97	99,11	0,170	0,161	116	0,258458
16,533	536,5	536,8	99,99	99,40	0,170	0,161	117	0,2580648
16,407	536,5	536,9	100,55	100,29	0,169	0,161	118	0,2560915
16,472	536,6	536,9	100,48	99,84	0,169	0,161	119	0,2570808
16,438	536,6	537,0	100,59	100,10	0,169	0,161	120	0,2565136
16,474	536,6	537,0	100,49	99,77	0,169	0,161	121	0,2570806
16,475	536,6	537,0	100,61	99,71	0,170	0,161	122	0,2570811
16,558	536,7	537,1	100,25	99,48	0,170	0,161	123	0,2580666
16,297	536,8	537,2	101,76	100,96	0,170	0,161	124	0,2541037
16,555	536,8	537,2	100,08	99,50	0,169	0,161	125	0,2580675
16,516	536,9	537,3	100,38	99,92	0,169	0,161	126	0,2574782
16,551	537,0	537,4	100,05	99,60	0,169	0,161	127	0,2580675
16,576	537,0	537,4	99,97	99,28	0,169	0,161	128	0,2584623
16,526	537,1	537,5	100,13	99,59	0,169	0,161	129	0,2574789

16,564	537,2	537,6	100,04	99,38	0,169	0,161	130	0,2580695
16,531	537,2	537,6	100,28	99,36	0,169	0,160	131	0,2574799
16,658	537,3	537,7	99,61	98,83	0,169	0,160	132	0,2594426
16,505	537,3	537,8	100,45	99,87	0,169	0,161	133	0,2570853
16,588	537,4	537,8	99,85	99,22	0,169	0,161	134	0,2584757
16,542	537,5	537,9	100,78	99,60	0,170	0,160	135	0,257481
16,602	537,5	538,0	99,88	99,03	0,169	0,160	136	0,2584648
16,535	537,6	538,0	100,43	99,57	0,169	0,160	137	0,2574814
16,596	537,7	538,1	99,71	99,17	0,169	0,160	138	0,2584649
16,656	537,6	538,1	99,58	98,74	0,169	0,160	139	0,2594449
16,579	537,7	538,2	100,05	99,74	0,169	0,161	140	0,2580723
16,560	537,9	538,3	100,25	99,92	0,169	0,161	141	0,2574829
16,402	538,0	538,5	101,27	100,50	0,169	0,160	142	0,2551075
16,681	538,2	538,6	99,62	98,66	0,169	0,160	143	0,2594462
16,586	538,3	538,7	100,15	99,48	0,169	0,160	144	0,2580736
16,694	538,3	538,8	99,16	98,34	0,169	0,160	145	0,2598383
16,597	538,4	538,9	100,20	99,52	0,169	0,160	146	0,2580739
16,543	538,4	538,9	100,31	99,78	0,169	0,160	147	0,2570893
16,603	538,5	539,0	99,82	99,40	0,169	0,160	148	0,2580745
16,324	538,7	539,1	101,89	101,40	0,169	0,160	149	0,2537118
16,472	538,6	539,1	100,82	100,25	0,169	0,160	150	0,2561002
16,686	538,5	539,1	99,75	98,85	0,169	0,160	151	0,2594479
16,645	538,5	539,1	100,17	99,33	0,169	0,160	152	0,2584686
16,521	538,6	539,1	100,97	99,97	0,169	0,160	153	0,256497
16,254	538,8	539,3	102,40	101,89	0,169	0,160	154	0,2523073
16,408	538,8	539,3	101,59	101,08	0,169	0,160	155	0,2547105
16,430	538,8	539,3	101,26	100,67	0,169	0,160	156	0,2551087
16,630	538,7	539,4	100,25	99,65	0,169	0,160	157	0,2580763
16,439	538,8	539,4	101,81	100,93	0,169	0,160	158	0,254711
16,522	539,0	539,5	100,85	100,27	0,169	0,160	159	0,2561023
16,461	539,2	539,6	101,35	100,73	0,168	0,160	160	0,25511
16,610	539,3	539,7	100,20	99,76	0,168	0,160	161	0,2574863
16,513	539,2	539,7	100,86	100,20	0,168	0,160	162	0,2561025
16,645	539,2	539,8	100,36	99,67	0,169	0,160	163	0,2580772
16,595	539,3	539,9	100,71	99,92	0,169	0,160	164	0,2570921
16,462	539,5	540,0	101,50	100,64	0,169	0,160	165	0,2551114
16,645	539,7	540,1	100,08	99,27	0,169	0,160	166	0,2580782
16,598	539,7	540,2	100,36	99,66	0,169	0,160	167	0,2574885
16,583	539,7	540,3	100,15	99,52	0,169	0,160	168	0,2574888
16,618	539,7	540,3	99,81	99,47	0,168	0,160	169	0,2580792
16,654	539,7	540,4	100,06	99,04	0,169	0,160	170	0,2584727
16,652	539,8	540,4	99,94	99,54	0,169	0,160	171	0,2584737
16,559	539,9	540,5	100,69	99,70	0,169	0,160	172	0,2570943
16,611	540,0	540,5	99,71	98,96	0,169	0,160	173	0,2580801
16,627	539,9	540,5	99,64	99,21	0,168	0,160	174	0,2584737
16,561	539,8	540,5	99,80	99,57	0,168	0,160	175	0,2574947
16,687	540,0	540,5	99,52	99,11	0,168	0,160	176	0,2592722
16,634	540,1	540,6	100,13	99,20	0,169	0,160	177	0,2584442
16,226	540,2	540,8	101,96	101,79	0,169	0,160	178	0,252312
16,488	540,3	540,8	100,40	99,79	0,168	0,160	179	0,2565019
16,728	540,2	540,7	98,81	98,20	0,169	0,160	180	0,2604293
16,659	540,2	540,7	98,94	98,62	0,168	0,160	181	0,2594532
16,477	540,2	540,8	99,90	99,74	0,168	0,160	182	0,2564981
16,576	540,2	540,8	99,68	99,42	0,168	0,160	183	0,258081
16,653	540,3	540,8	99,02	98,66	0,168	0,160	184	0,2594535
16,579	540,4	540,9	99,63	99,00	0,169	0,160	185	0,2584744
16,568	540,3	540,9	99,63	98,65	0,169	0,160	186	0,2584741
16,532	540,3	541,0	99,34	98,99	0,169	0,160	187	0,258081
16,528	540,4	541,0	99,27	98,70	0,168	0,160	188	0,2580808
16,437	540,4	541,0	99,78	99,37	0,168	0,160	189	0,2565028
16,493	540,5	541,1	99,26	99,22	0,168	0,160	190	0,257491
16,483	540,7	541,2	99,26	99,52	0,168	0,161	191	0,2574934
16,535	540,7	541,2	99,03	98,95	0,168	0,161	192	0,2584753
16,589	540,5	541,2	98,75	98,32	0,168	0,160	193	0,2594549
16,499	540,5	541,2	99,20	98,75	0,169	0,160	194	0,2580815
16,671	540,5	541,3	98,29	97,89	0,168	0,160	195	0,2604316
16,451	540,6	541,3	99,50	99,22	0,168	0,160	196	0,2570971
16,590	540,8	541,4	98,49	98,26	0,168	0,160	197	0,2594551
16,490	540,8	541,5	98,95	99,00	0,168	0,160	198	0,2580833

16,633	540,6	541,4	98,48	97,82	0,169	0,160	199	0,2604326
16,698	540,5	541,3	97,66	97,48	0,169	0,160	200	0,2614062
16,590	540,6	541,4	98,68	98,34	0,168	0,160	201	0,2594556
16,521	540,7	541,4	98,69	98,58	0,168	0,160	202	0,2584762
16,511	540,9	541,5	98,85	98,53	0,168	0,160	203	0,2584763
16,649	540,8	541,4	97,80	97,86	0,168	0,160	204	0,2608224
16,495	540,6	541,4	98,60	98,23	0,168	0,160	205	0,258476
16,402	540,5	541,3	99,26	99,12	0,168	0,160	206	0,2570969
16,504	540,5	541,3	98,89	98,75	0,168	0,161	207	0,2584761
16,655	540,6	541,3	98,04	97,67	0,168	0,160	208	0,2608221
16,499	540,7	541,4	98,60	98,35	0,168	0,160	209	0,2584759
16,365	540,8	541,4	99,55	99,39	0,168	0,160	210	0,2565048
16,610	540,8	541,4	97,71	97,63	0,168	0,160	211	0,2604326
16,637	540,7	541,4	97,53	97,48	0,168	0,160	212	0,2608227
16,571	540,6	541,3	98,26	98,13	0,168	0,160	213	0,2598476
16,606	540,5	541,2	97,94	98,01	0,168	0,161	214	0,2604327
16,486	540,5	541,1	98,93	98,76	0,168	0,161	215	0,2584762
16,568	540,5	541,1	98,29	97,95	0,169	0,161	216	0,2598464
16,327	540,5	541,1	99,73	99,31	0,169	0,160	217	0,2561087
16,537	540,5	541,1	98,21	98,34	0,168	0,161	218	0,2594552
16,589	540,5	541,1	97,95	97,62	0,168	0,161	219	0,2604311
16,607	540,4	541,0	97,63	97,73	0,168	0,161	220	0,2608206
16,608	540,4	541,0	97,73	97,46	0,168	0,161	221	0,2608218
16,614	540,3	540,9	97,87	97,60	0,168	0,160	222	0,2608211
16,548	540,3	540,8	98,02	97,89	0,168	0,161	223	0,2598459
16,459	540,3	540,9	98,32	98,21	0,168	0,160	224	0,2584753
16,427	540,3	540,9	98,74	98,50	0,168	0,160	225	0,2580816
16,425	540,3	540,9	98,65	98,56	0,168	0,161	226	0,2580816
16,593	540,3	540,9	97,58	97,39	0,168	0,160	227	0,260821
16,556	540,2	540,9	98,11	97,50	0,169	0,160	228	0,260431
16,348	540,1	540,8	98,93	98,90	0,169	0,161	229	0,2570967
16,513	540,1	540,7	98,32	98,00	0,168	0,161	230	0,2594554
16,567	540,0	540,7	97,60	97,56	0,168	0,160	231	0,2604313
16,565	540,1	540,7	97,82	97,52	0,168	0,160	232	0,2604314
16,586	540,1	540,6	97,56	97,36	0,168	0,160	233	0,2608217
16,521	540,0	540,6	97,82	98,06	0,168	0,161	234	0,2598468
16,511	540,0	540,5	97,91	98,08	0,168	0,161	235	0,2598459
16,551	539,8	540,5	97,81	97,60	0,169	0,161	236	0,2604304
16,562	539,8	540,4	97,93	97,43	0,169	0,160	237	0,2604295
16,217	539,9	540,4	100,21	99,66	0,169	0,160	238	0,2551144
16,405	539,9	540,5	98,56	98,45	0,169	0,161	239	0,2580799
16,573	539,8	540,4	97,69	97,48	0,169	0,161	240	0,2608197
16,505	539,8	540,4	97,72	97,88	0,168	0,161	241	0,2598441
16,533	539,7	540,3	97,71	97,39	0,168	0,161	242	0,2604282
16,564	539,6	540,3	97,52	97,26	0,169	0,161	243	0,2608196
16,566	539,5	540,2	97,45	97,71	0,168	0,161	244	0,2608193
16,662	539,5	540,2	97,13	96,90	0,168	0,161	245	0,2621779
16,508	539,5	540,2	98,03	97,77	0,169	0,161	246	0,2598545
16,505	539,6	540,1	98,08	97,70	0,169	0,161	247	0,2598438
16,573	539,6	540,1	97,37	97,48	0,169	0,161	248	0,2609352
16,616	539,6	540,1	97,27	97,17	0,169	0,161	249	0,2617887
16,471	539,5	540,1	97,87	97,93	0,169	0,161	250	0,2594509
16,494	539,5	540,0	97,64	97,59	0,168	0,161	251	0,2598419
16,507	539,5	540,0	98,08	97,96	0,168	0,161	252	0,2598423
16,541	539,5	540,0	97,71	97,28	0,169	0,161	253	0,2604669
16,346	539,5	540,0	99,02	98,66	0,169	0,161	254	0,2574871
16,384	539,6	540,0	98,71	98,31	0,169	0,161	255	0,2580777
16,491	539,5	540,0	98,05	97,62	0,169	0,161	256	0,2598417
16,520	539,4	540,0	97,57	97,51	0,169	0,161	257	0,2604266
16,398	539,3	540,0	98,50	98,17	0,169	0,161	258	0,2584703
16,489	539,3	539,9	97,86	97,87	0,169	0,161	259	0,2598414
16,482	539,3	539,9	98,16	98,03	0,169	0,161	260	0,2595128
16,532	539,3	539,9	97,87	97,41	0,169	0,161	261	0,2604267
16,495	539,3	539,8	97,88	97,86	0,169	0,161	262	0,2598409
16,336	539,2	539,8	98,53	98,70	0,168	0,161	263	0,257478
16,607	539,2	539,7	97,22	97,24	0,169	0,161	264	0,2617871
16,486	539,1	539,7	97,89	97,83	0,169	0,161	265	0,2598406
16,628	539,0	539,6	97,00	97,00	0,169	0,161	266	0,2621747
16,410	539,0	539,6	98,94	98,21	0,169	0,161	267	0,2584694

16,398	538,9	539,5	98,39	98,29	0,169	0,161	268	0,2584687
16,589	539,0	539,5	97,50	97,24	0,169	0,161	269	0,2613979

Average	Average	Average						Average
16,27	Inlet +	Inlet +						0,252
	Outlet	Outlet	Average	Average	#1	#2		
Tunnel	Temp.	Temp.	100,60	99,54	System 1	System 2		SQRT
Velocity	Meter 1	Meter 2	**Proportional Rates**		Vol.Std.	Vol.Std.		Delta-P
			PR1	**PR2**			Time	
Ft/Sec	Deg. R	Deg. R	**%**	**%**	(ft3)	(ft3)	min	(in H2O)2
16,105	534,6	535,2			0,170	0,130	0	0,2453577
16,323	534,8	535,3	103,53	102,34	0,170	0,145	1	0,249865
16,226	534,8	535,2	103,09	102,11	0,170	0,161	2	0,2492556
16,081	534,8	535,2	104,49	103,68	0,170	0,161	3	0,2468011
16,234	534,8	535,2	102,80	101,83	0,170	0,161	4	0,2498653
16,223	534,7	535,2	101,48	100,90	0,170	0,161	5	0,2512829
16,378	534,7	535,2	100,35	99,30	0,170	0,161	6	0,2540942
16,241	534,6	535,1	101,02	99,85	0,170	0,161	7	0,2522902
16,192	534,7	535,1	101,25	99,80	0,171	0,161	8	0,2516867
16,162	534,7	535,1	101,10	100,10	0,170	0,161	9	0,2512833
16,124	534,7	535,1	101,47	100,38	0,170	0,161	10	0,2508784
16,231	534,7	535,1	100,37	99,84	0,170	0,161	11	0,2526929
16,198	534,7	535,1	100,40	99,88	0,170	0,161	12	0,2522908
16,280	534,6	535,1	100,18	99,02	0,170	0,161	13	0,2536948
16,162	534,6	535,1	100,94	99,85	0,170	0,161	14	0,2516866
16,286	534,7	535,1	100,33	99,16	0,171	0,161	15	0,2536947
16,195	534,7	535,1	100,79	99,47	0,171	0,161	16	0,2522907
16,223	534,8	535,2	100,67	99,70	0,171	0,161	17	0,252693
16,194	534,8	535,2	100,56	99,61	0,170	0,161	18	0,2522903
16,313	535,0	535,4	100,01	98,74	0,170	0,161	19	0,2540946
16,286	535,0	535,4	99,98	99,39	0,170	0,161	20	0,2536953
16,311	535,1	535,5	99,91	99,02	0,170	0,161	21	0,2540939
16,128	535,2	535,6	101,10	99,38	0,170	0,161	22	0,2512841
16,309	535,3	535,7	99,76	98,94	0,170	0,161	23	0,254095
16,285	535,3	535,8	99,71	99,06	0,170	0,161	24	0,2536954
16,344	535,4	535,8	99,60	98,79	0,170	0,161	25	0,2546933
16,351	535,5	535,9	99,54	98,56	0,170	0,161	26	0,2546933
16,217	535,5	535,9	100,28	99,46	0,170	0,161	27	0,2526944
16,198	535,6	536,0	100,93	99,20	0,170	0,161	28	0,252292
16,161	535,6	536,1	100,66	99,59	0,170	0,160	29	0,2516878
16,070	535,7	536,1	101,42	100,27	0,170	0,161	30	0,2502736
16,316	535,8	536,2	99,58	98,73	0,170	0,161	31	0,2540927
16,198	535,8	536,2	100,52	99,38	0,170	0,161	32	0,2522916
16,316	535,9	536,3	99,71	98,74	0,170	0,161	33	0,2540961
16,290	535,9	536,4	99,75	99,04	0,170	0,161	34	0,2536961
16,223	535,9	536,4	100,27	99,09	0,170	0,161	35	0,2526947
16,228	536,0	536,4	100,37	99,05	0,170	0,160	36	0,2526943
16,291	536,0	536,5	100,02	98,70	0,170	0,160	37	0,2536967
16,289	536,0	536,5	99,72	98,91	0,170	0,161	38	0,253697
16,200	536,0	536,5	100,55	99,56	0,170	0,161	39	0,2522921
16,317	536,0	536,6	99,54	98,92	0,170	0,161	40	0,2540961
16,318	536,1	536,6	99,46	98,66	0,170	0,161	41	0,2540959
16,291	536,1	536,7	99,97	98,70	0,170	0,160	42	0,2536973
16,317	536,1	536,7	99,72	98,49	0,170	0,160	43	0,2540964
16,162	536,2	536,7	100,88	99,51	0,170	0,160	44	0,2516883
16,321	536,2	536,7	99,85	98,59	0,170	0,160	45	0,2540966
16,298	536,2	536,8	100,05	98,59	0,170	0,160	46	0,2536974
16,169	536,3	536,8	100,61	99,79	0,170	0,160	47	0,2516888
16,211	536,3	536,9	100,55	99,50	0,170	0,161	48	0,2522925
16,147	536,4	536,9	100,79	99,87	0,170	0,161	49	0,2512857
16,237	536,3	536,9	100,33	99,14	0,170	0,160	50	0,2526956
16,215	536,4	537,0	100,59	99,25	0,170	0,160	51	0,2522929
16,333	536,5	537,0	99,53	98,54	0,170	0,160	52	0,2540973
16,244	536,5	537,1	100,21	99,44	0,170	0,160	53	0,2526959
16,157	536,6	537,1	100,62	100,18	0,169	0,161	54	0,2512872
16,222	536,7	537,2	100,35	99,82	0,169	0,161	55	0,2522941
16,250	536,7	537,3	100,44	99,02	0,170	0,161	56	0,2526965
16,227	536,8	537,3	100,51	99,44	0,170	0,160	57	0,2522936
16,474	536,8	537,4	99,11	97,88	0,170	0,160	58	0,2560879
16,323	536,9	537,5	99,88	98,89	0,170	0,160	59	0,2536987
16,384	537,0	537,5	99,57	98,42	0,170	0,160	60	0,2546965
16,232	537,0	537,6	100,39	99,58	0,170	0,160	61	0,2522944
16,148	537,1	537,6	100,89	100,22	0,169	0,161	62	0,2508831
16,331	537,1	537,7	100,13	98,98	0,170	0,161	63	0,2536989
16,247	537,2	537,7	100,61	99,29	0,170	0,160	64	0,252295
16,275	537,3	537,8	100,72	99,30	0,170	0,160	65	0,2526965
16,342	537,3	537,8	99,81	98,95	0,170	0,160	66	0,2536992
16,284	537,4	537,9	100,35	99,40	0,169	0,160	67	0,2526973
16,222	537,4	538,0	100,55	99,57	0,169	0,160	68	0,2516912

16,222	537,5	538,0	100,91	99,72	0,169	0,160	69	0,2516905
16,230	537,5	538,1	101,25	99,54	0,170	0,160	70	0,2516909
16,298	537,6	538,1	100,38	99,34	0,170	0,160	71	0,2526973
16,239	537,6	538,2	100,98	99,68	0,169	0,160	72	0,2516913
16,194	537,7	538,2	101,32	99,96	0,170	0,160	73	0,2508836
16,283	537,7	538,2	100,51	99,44	0,169	0,160	74	0,2522951
16,254	537,8	538,3	100,59	100,00	0,169	0,160	75	0,2516911
16,261	537,8	538,3	101,04	99,97	0,169	0,160	76	0,2516915
16,182	537,9	538,4	101,63	100,64	0,169	0,160	77	0,2502764
16,275	537,9	538,4	101,48	100,24	0,170	0,160	78	0,251572
16,203	537,9	538,5	102,13	100,65	0,170	0,160	79	0,2502766
16,189	537,9	538,5	101,95	100,90	0,170	0,160	80	0,2499023
16,352	538,0	538,6	100,98	99,91	0,169	0,160	81	0,2522951
16,273	538,0	538,6	101,47	100,68	0,169	0,160	82	0,2508838
16,377	538,1	538,7	100,89	100,23	0,169	0,160	83	0,2522951
16,236	538,2	538,8	102,05	101,23	0,169	0,160	84	0,2498707
16,317	538,3	538,8	101,94	100,97	0,169	0,160	85	0,2508845
16,356	538,3	538,9	101,95	100,84	0,169	0,160	86	0,251289
16,276	538,4	538,9	102,53	101,32	0,169	0,160	87	0,2498717
16,245	538,4	539,0	102,68	101,57	0,169	0,160	88	0,2492623
16,295	538,5	539,1	102,49	100,94	0,169	0,159	89	0,2498713
16,299	538,5	539,1	102,51	101,59	0,169	0,160	90	0,249871
16,331	538,6	539,2	102,35	101,21	0,169	0,160	91	0,2502781
16,243	538,7	539,2	103,42	102,17	0,169	0,160	92	0,2488541
16,270	538,8	539,3	102,73	101,98	0,169	0,160	93	0,249261
16,342	538,8	539,3	102,54	101,32	0,169	0,160	94	0,2502775
16,024	538,9	539,4	104,28	103,39	0,169	0,160	95	0,2453636
16,323	538,9	539,5	102,67	101,54	0,169	0,160	96	0,2498712
16,262	539,0	539,5	103,01	101,90	0,169	0,160	97	0,248855
16,199	539,0	539,6	103,34	102,45	0,169	0,160	98	0,2478327
16,272	539,1	539,6	103,10	102,01	0,169	0,160	99	0,2488545
16,305	539,1	539,7	103,03	101,91	0,169	0,160	100	0,2492615
16,253	539,2	539,8	103,43	102,07	0,169	0,160	101	0,2484457
16,221	539,3	539,8	103,43	102,14	0,169	0,159	102	0,247833
16,364	539,3	539,9	102,91	101,82	0,169	0,159	103	0,2498714
16,364	539,4	539,9	102,24	101,17	0,169	0,159	104	0,2502785
16,067	539,5	540,0	103,50	102,75	0,168	0,159	105	0,2463963
16,176	539,5	540,1	102,86	101,73	0,169	0,160	106	0,2484458
16,282	539,6	540,1	101,90	100,79	0,169	0,160	107	0,2502782
16,306	539,6	540,2	101,77	100,81	0,169	0,160	108	0,2508851
16,387	539,6	540,2	101,04	99,55	0,169	0,160	109	0,2522975
16,179	539,7	540,2	102,23	100,79	0,169	0,159	110	0,2492618
16,362	539,7	540,3	100,68	99,48	0,169	0,159	111	0,2522971
16,291	539,8	540,3	101,20	100,16	0,169	0,159	112	0,25129
16,283	539,8	540,4	101,00	100,08	0,169	0,160	113	0,2512898
16,281	539,8	540,4	101,07	100,39	0,169	0,160	114	0,2512906
16,259	539,9	540,5	101,36	99,91	0,169	0,160	115	0,2508859
16,218	539,9	540,5	101,36	100,33	0,169	0,159	116	0,2502793
16,355	540,0	540,5	100,37	99,52	0,168	0,159	117	0,2522995
16,386	540,0	540,6	100,56	99,29	0,168	0,159	118	0,2527002
16,367	540,1	540,6	100,64	99,90	0,169	0,159	119	0,2522982
16,247	540,1	540,7	101,64	100,81	0,169	0,160	120	0,2502809
16,324	540,1	540,7	101,41	100,30	0,169	0,160	121	0,2512909
16,313	540,2	540,8	101,56	100,51	0,169	0,160	122	0,2508861
16,060	540,3	540,8	103,32	102,11	0,169	0,159	123	0,2468084
16,341	540,3	540,9	101,61	100,20	0,169	0,159	124	0,2508865
16,218	540,3	540,9	102,58	101,57	0,169	0,159	125	0,248856
16,322	540,4	540,9	101,97	100,83	0,169	0,159	126	0,2502795
16,296	540,4	541,0	102,23	101,32	0,169	0,159	127	0,2498697
16,372	540,5	541,0	101,57	101,05	0,168	0,160	128	0,2508862
16,378	540,5	541,1	101,77	100,85	0,168	0,160	129	0,2508867
16,340	540,6	541,1	102,01	100,93	0,168	0,159	130	0,2502792
16,276	540,6	541,2	102,51	101,34	0,168	0,159	131	0,2492637
16,346	540,6	541,2	102,07	100,75	0,168	0,159	132	0,25028
16,185	540,7	541,3	103,05	102,36	0,168	0,159	133	0,2478346
16,182	540,7	541,3	103,49	102,00	0,169	0,159	134	0,2478349
16,111	540,8	541,3	103,36	102,46	0,169	0,159	135	0,2468087
16,172	540,8	541,4	103,10	101,98	0,168	0,159	136	0,247843
16,325	540,8	541,4	101,75	100,75	0,168	0,159	137	0,2502799
16,296	540,8	541,4	102,15	101,06	0,168	0,159	138	0,2498735
16,253	540,8	541,5	102,26	101,05	0,168	0,159	139	0,2492638
16,271	540,9	541,5	101,97	100,99	0,168	0,159	140	0,249632
16,243	540,9	541,5	102,23	101,27	0,168	0,159	141	0,2492641
16,147	540,9	541,5	102,87	101,80	0,168	0,159	142	0,2478358
16,393	540,9	541,5	101,31	100,27	0,169	0,159	143	0,2516956
16,209	540,9	541,5	102,18	101,25	0,168	0,159	144	0,2488571

16,233	541,0	541,6	102,28	101,13	0,168	0,159	145	0,2492641
16,232	541,0	541,6	101,95	101,09	0,168	0,159	146	0,2492642
16,365	541,0	541,7	101,06	100,27	0,168	0,159	147	0,2512915
16,364	541,0	541,7	101,42	100,30	0,168	0,159	148	0,2512918
16,136	541,0	541,7	102,71	101,69	0,168	0,159	149	0,247835
16,295	541,0	541,7	101,92	100,61	0,169	0,159	150	0,2502806
16,304	541,0	541,7	101,80	100,67	0,169	0,159	151	0,250396
16,232	541,0	541,7	102,31	101,07	0,169	0,159	152	0,249264
16,338	541,1	541,7	101,42	100,39	0,168	0,159	153	0,2508728
16,276	541,1	541,8	102,02	100,77	0,168	0,159	154	0,2498735
16,283	541,1	541,8	101,90	100,89	0,168	0,159	155	0,2498737
16,360	541,1	541,8	101,65	100,76	0,168	0,159	156	0,2508876
16,204	541,1	541,8	102,75	101,79	0,168	0,159	157	0,2484479
16,262	541,2	541,8	102,09	101,38	0,168	0,159	158	0,2492635
16,269	541,2	541,9	102,27	101,24	0,168	0,159	159	0,249264
16,274	541,2	541,9	102,13	101,40	0,168	0,159	160	0,2492642
16,170	541,2	541,9	102,79	101,95	0,168	0,159	161	0,2478349
16,333	541,2	541,9	102,07	100,87	0,168	0,159	162	0,25028
16,181	541,2	541,9	103,01	102,04	0,168	0,159	163	0,2478356
16,231	541,2	541,9	102,66	101,59	0,168	0,159	164	0,2487354
16,214	541,2	541,9	102,62	101,34	0,168	0,159	165	0,2484481
16,313	541,2	541,9	102,19	101,04	0,168	0,159	166	0,2498739
16,346	541,2	541,9	101,93	101,07	0,168	0,159	167	0,250281
16,347	541,3	542,0	101,84	100,78	0,168	0,159	168	0,2502803
16,183	541,3	542,0	103,16	101,73	0,168	0,159	169	0,2478589
16,339	541,3	542,0	102,03	100,90	0,169	0,159	170	0,2502802
16,303	541,3	542,0	102,41	101,12	0,169	0,159	171	0,2498745
16,292	541,3	542,0	101,82	101,29	0,168	0,159	172	0,2498742
16,368	541,3	542,0	101,25	100,12	0,168	0,159	173	0,2512918
16,261	541,3	542,0	101,53	100,60	0,168	0,159	174	0,2498736
16,210	541,3	542,0	102,09	100,63	0,168	0,159	175	0,2492636
16,303	541,3	542,0	101,66	100,31	0,169	0,159	176	0,2508873
16,290	541,3	542,0	101,09	100,26	0,169	0,159	177	0,2508864
16,368	541,3	542,0	100,61	99,52	0,168	0,159	178	0,252297
16,359	541,3	542,1	100,53	99,68	0,168	0,159	179	0,2522995
16,311	541,3	542,1	100,50	99,57	0,168	0,159	180	0,2516949
16,271	541,3	542,0	100,38	99,72	0,168	0,159	181	0,2512624
16,294	541,2	542,0	100,61	99,39	0,168	0,159	182	0,2516945
16,200	541,2	542,0	101,10	99,90	0,168	0,159	183	0,2502799
16,351	541,2	542,0	100,43	99,01	0,169	0,159	184	0,2527017
16,320	541,2	542,0	100,61	99,23	0,169	0,159	185	0,2522969
16,315	541,2	541,9	100,20	99,12	0,169	0,159	186	0,2522988
16,311	541,2	541,9	100,14	99,19	0,168	0,159	187	0,2522989
16,308	541,2	541,9	99,97	99,01	0,168	0,159	188	0,2522989
16,237	541,1	541,9	100,27	99,61	0,168	0,159	189	0,2512918
16,325	541,1	541,8	99,78	98,75	0,168	0,159	190	0,2527014
16,227	541,1	541,8	100,52	99,46	0,168	0,159	191	0,2512921
16,251	541,1	541,8	100,46	99,51	0,169	0,159	192	0,2516943
16,117	541,1	541,8	101,18	100,16	0,169	0,159	193	0,2496822
16,245	541,0	541,8	100,22	99,42	0,168	0,159	194	0,251695
16,305	541,0	541,8	99,80	98,54	0,168	0,159	195	0,2527011
16,276	541,0	541,7	99,94	98,91	0,168	0,159	196	0,252303
16,207	541,0	541,7	100,32	99,10	0,168	0,159	197	0,2512912
16,356	541,0	541,7	99,77	98,25	0,169	0,159	198	0,2537036
16,218	540,9	541,6	100,04	98,99	0,169	0,159	199	0,2516946
16,345	540,8	541,6	99,44	98,23	0,168	0,159	200	0,2537033
16,274	540,8	541,6	99,50	98,80	0,168	0,159	201	0,2526992
16,235	540,6	541,5	99,97	99,03	0,168	0,159	202	0,2521439
16,397	540,6	541,4	98,86	97,67	0,169	0,159	203	0,2547008
16,356	540,6	541,4	98,98	97,80	0,168	0,159	204	0,2541021
16,192	540,6	541,4	100,06	98,92	0,168	0,159	205	0,2516327
16,322	540,5	541,4	99,30	98,20	0,169	0,159	206	0,2537031
16,209	540,5	541,4	100,01	98,87	0,169	0,159	207	0,2520072
16,313	540,5	541,3	99,03	98,13	0,169	0,159	208	0,2537027
16,219	540,4	541,3	99,84	98,81	0,169	0,159	209	0,2522981
16,370	540,4	541,3	98,58	97,45	0,168	0,159	210	0,2547006
16,303	540,4	541,3	98,87	97,99	0,168	0,159	211	0,2537032
16,169	540,4	541,2	100,04	98,92	0,168	0,159	212	0,251653
16,232	540,4	541,2	99,51	98,50	0,169	0,159	213	0,2527006
16,229	540,3	541,2	99,71	98,34	0,169	0,159	214	0,2526903
16,285	540,3	541,2	99,25	97,99	0,169	0,159	215	0,2536126
16,352	540,3	541,1	98,84	97,55	0,169	0,159	216	0,2547007
16,349	540,3	541,1	98,62	97,75	0,169	0,159	217	0,2546797
16,284	540,2	541,1	99,17	98,19	0,169	0,160	218	0,2537025
16,344	540,2	541,0	98,61	97,57	0,169	0,159	219	0,2546961
16,280	540,1	541,0	99,10	97,86	0,169	0,159	220	0,2537023

16,370	540,1	540,9	98,66	97,61	0,169	0,159	221	0,2550992
16,302	540,1	540,9	98,82	97,86	0,169	0,159	222	0,2541023
16,427	540,0	540,9	97,84	97,25	0,168	0,160	223	0,2560914
16,272	540,1	540,9	99,07	97,89	0,168	0,159	224	0,2537029
16,270	540,0	540,8	98,99	97,86	0,169	0,159	225	0,2537019
16,266	540,0	540,8	98,97	97,74	0,169	0,159	226	0,2537019
16,290	539,9	540,8	99,25	97,71	0,169	0,159	227	0,2541013
16,351	539,9	540,7	98,36	97,99	0,169	0,160	228	0,2550987
16,324	539,9	540,7	98,71	97,69	0,169	0,160	229	0,2546996
16,346	539,8	540,7	98,23	97,05	0,169	0,159	230	0,255098
16,256	539,7	540,6	99,03	97,85	0,169	0,159	231	0,2537021
16,318	539,7	540,6	98,54	97,55	0,169	0,159	232	0,2546996
16,279	539,7	540,5	98,67	97,85	0,169	0,160	233	0,2540991
16,275	539,7	540,5	98,79	97,64	0,169	0,159	234	0,2541011
16,336	539,7	540,5	98,46	97,12	0,169	0,159	235	0,2550975
16,311	539,6	540,5	98,68	97,40	0,169	0,159	236	0,2546994
16,339	539,7	540,5	98,82	97,33	0,169	0,159	237	0,2550985
16,400	539,6	540,4	97,94	97,00	0,169	0,159	238	0,2560912
16,180	539,6	540,4	99,45	98,20	0,169	0,159	239	0,2527005
16,243	539,5	540,3	98,75	97,56	0,169	0,159	240	0,2537014
16,308	539,5	540,3	98,63	97,74	0,169	0,159	241	0,2546992
16,242	539,5	540,3	98,90	97,69	0,169	0,160	242	0,2537019
16,329	539,4	540,2	98,26	97,53	0,169	0,160	243	0,2550981
16,391	539,4	540,2	98,01	97,15	0,169	0,160	244	0,2560906
16,390	539,4	540,2	98,08	96,99	0,169	0,160	245	0,2560903
16,234	539,3	540,2	99,05	97,57	0,169	0,159	246	0,2537019
16,326	539,3	540,1	98,24	97,09	0,169	0,159	247	0,2550975
16,300	539,3	540,1	98,67	97,34	0,169	0,159	248	0,254699
16,145	539,2	540,0	99,30	98,53	0,169	0,160	249	0,2522965
16,145	539,2	540,0	99,23	98,18	0,169	0,159	250	0,252296
16,297	539,2	540,0	98,66	97,70	0,169	0,160	251	0,2546991
16,318	539,2	540,0	98,39	97,75	0,169	0,160	252	0,2550878
16,383	539,2	539,9	98,22	96,96	0,169	0,160	253	0,2560904
16,383	539,2	539,9	98,13	96,87	0,169	0,160	254	0,2560906
16,294	539,1	539,9	98,71	97,34	0,169	0,159	255	0,2546988
16,232	539,1	539,9	98,88	97,80	0,169	0,159	256	0,2537015
16,409	539,1	539,9	97,97	96,66	0,169	0,159	257	0,2564856
16,386	539,1	539,9	97,98	97,18	0,169	0,160	258	0,2560909
16,293	539,1	539,9	98,59	97,85	0,169	0,160	259	0,2546996
16,322	539,1	539,9	98,56	97,34	0,169	0,160	260	0,2550979
16,384	539,2	539,9	97,95	96,91	0,169	0,160	261	0,2560907
16,235	539,2	539,9	98,69	98,07	0,169	0,160	262	0,2537013
16,260	539,2	539,9	98,85	97,74	0,169	0,160	263	0,2541008
16,145	539,2	540,0	99,46	98,54	0,169	0,160	264	0,2522971
16,326	539,3	540,0	98,37	97,30	0,169	0,160	265	0,2550976
16,417	539,3	540,0	98,28	97,00	0,169	0,160	266	0,2564858
16,393	539,4	540,1	97,94	97,19	0,169	0,160	267	0,2560903
16,174	539,3	540,1	99,45	98,35	0,169	0,160	268	0,252699
16,267	539,3	540,1	98,80	97,77	0,169	0,160	269	0,2541008
16,378	539,3	540,0	98,21	96,95	0,169	0,159	270	0,2558225
16,331	539,4	540,1	98,54	97,34	0,169	0,159	271	0,2550979
16,395	539,4	540,1	97,87	97,19	0,169	0,160	272	0,2560911
16,178	539,4	540,1	99,46	98,01	0,169	0,159	273	0,2527002
16,244	539,5	540,1	98,76	98,05	0,169	0,159	274	0,2537019
16,334	539,5	540,1	98,15	97,26	0,168	0,160	275	0,2550979
16,335	539,5	540,2	98,52	97,14	0,169	0,159	276	0,2550978
16,310	539,5	540,2	98,57	97,13	0,169	0,159	277	0,2546994
16,248	539,6	540,2	99,17	97,68	0,169	0,159	278	0,253702
16,123	539,6	540,2	99,90	98,42	0,169	0,159	279	0,2516941

APPENDIX 3: Calibration data

Instrumentation Saint•Laurent inc.
Accrédité ISO 17025

CLAS NRC·CNRC CLAS 2010-02

SCC Accredited LAB
LAB Accrédité CCN N°669

80 rue de la montagne
St-Joseph du lac
(Québec), J0N 1M0
Tél: (450) 473-6169
Fax: (450) 473-5207
Email: inst.st-laurent@videotron.ca

CERTIFICAT D'ÉTALONNAGE

No.Certificat: CE-EM-001 06/02/15

CLIENT	
Compagnie:	Services Polytests Inc
Adresse:	695 B rue Gaudette
	St-Jean-sur-Richelieu, Québec, J3B 7S7

SPÉCIFICATION DE CALIBRATION	
Procédure de service:	4IN9101
Précision requise:	+\- 2.0°C
Fréquence d'étalonnage: (jours)	365

SPÉCIFICATION DE L'INSTRUMENT			
Type d'instrument:	Enregistreur	**Type d'entrée:**	Temp
Manufacturier:	Fluke	**Type de sortie:**	Digitale
No. Model:	52-II	**Type de mesure:**	Température
No. Série:	90630037	**Gamme:**	Divers
Emplacement:	N.A.	**Conditions Enviro:**	Normale

SPÉCIFICATION DE L'ÉTALON			
Étalon Utilisé:	Fluke 744	**No. du certificat d'étalonnage:**	AC15011147-8180008
No. Série:	8180008	**Dernière date d'étalonnage:**	15-Jan-15
Certificat fait par:	Alpha Controls	**Prochaine date d'étalonnage:**	15-Apr-15
Commentaire:			

RÉSULTAT D'ÉTALONNAGE

Entrée Source	Valeur Donnée	Valeur Actuelle	Erreur de Déviation	Valeur après Étalonnage	Incertitude Élargie	Commentaire
0.0 °C	0.0 °C	0.0 °C	0.0 °C	0.00 °C	1.0 °C	T1 typeJ
125.0 °C	125.0 °C	125.0 °C	0.0 °C	125.0 °C	1.0 °C	T1 typeJ
250.0 °C	250.0 °C	250.0 °C	0.0 °C	250.0 °C	1.0 °C	T1 typeJ
375.0 °C	375.0 °C	375.0 °C	0.0 °C	375.0 °C	1.0 °C	T1 typeJ
500.0 °C	500.0 °C	500.0 °C	0.0 °C	500.0 °C	1.0 °C	T1 typeJ
0.0 °C	0.0 °C	0.0 °C	0.0 °C	0.0 °C	1.0 °C	T2 typeJ
125.0 °C	125.0 °C	125.0 °C	0.0 °C	125.0 °C	1.0 °C	T2 typeJ
250.0 °C	250.0 °C	250.0 °C	0.0 °C	250.0 °C	1.0 °C	T2 typeJ
375.0 °C	375.0 °C	375.0 °C	0.0 °C	375.0 °C	1.0 °C	T2 typeJ
500.0 °C	500.0 °C	500.0 °C	0.0 °C	500.0 °C	1.0 °C	T2 typeJ
0.0 °C	0.0 °C	0.0 °C	0.0 °C	0.0 °C	1.0 °C	T1 typeK
125.0 °C	125.0 °C	125.0 °C	0.0 °C	125.0 °C	1.0 °C	T1 typeK
250.0 °C	250.0 °C	250.0 °C	0.0 °C	250.0 °C	1.0 °C	T1 typeK
375.0 °C	375.0 °C	375.0 °C	0.0 °C	375.0 °C	1.0 °C	T1 typeK
500.0 °C	500.0 °C	500.0 °C	0.0 °C	500.0 °C	1.0 °C	T1 typeK
0.0 °C	0.0 °C	0.0 °C	0.0 °C	0.0 °C	1.0 °C	T2 typeK
125.0 °C	125.0 °C	125.0 °C	0.0 °C	125.0 °C	1.0 °C	T2 typeK
250.0 °C	250.0 °C	250.0 °C	0.0 °C	250.0 °C	1.0 °C	T2 typeK
375.0 °C	375.0 °C	375.0 °C	0.0 °C	375.0 °C	1.0 °C	T2 typeK
500.0 °C	500.0 °C	500.0 °C	0.0 °C	500.0 °C	1.0 °C	T2 typeK

Conditions Environnementales: Température: 20 °C Humidité: 28 %RH

Type d'Étalonnage:

2015-02-06

5F09101

Le droit d'auteur du présent certificat appartient à Inst. St-Laurent Inc et doit être reproduit intégralement, à moins d'une autorisation écrite de Inst. St-Laurent Inc.

Instrumentation Saint•Laurent inc.
Accrédité ISO 17025

CLAS NRC·CNRC
CLAS 2010-02

SCC Accredited LAB
LAB Accrédité CCN
N°669

80 rue de la montagne
St-Joseph du lac
(Québec), J0N 1M0
Tél: (450) 473-6169
Fax: (450) 473-5207
Email: inst.st-laurent@videotron.ca

CERTIFICAT D'ÉTALONNAGE

No.Certificat: CE-EM-001 06/02/15

CLIENT	
Compagnie:	Services Polytests Inc
Adresse:	695 B rue Gaudette
	St-Jean-sur-Richelieu, Québec, J3B 7S7

SPÉCIFICATION DE CALIBRATION	
Procédure de service:	4IN9101
Précision requise:	+\- 2.0°C
Fréquence d'étalonnage: (jours)	365

SPÉCIFICATION DE L'INSTRUMENT			
Type d'instrument:	Enregistreur	**Type d'entrée:**	Temp
Manufacturier:	Fluke	**Type de sortie:**	Digitale
No. Model:	52-II	**Type de mesure:**	Température
No. Série:	90630037	**Gamme:**	Divers
Emplacement:	N.A.	**Conditions Enviro:**	Normale

Instrumentation St-Laurent Inc. Certifie que l'instrument ci-haut, rencontre ou excède les spécifications établies par le fabriquant. Le système qualité de l'entreprise est conforme aux exigences de la norme ISO 17025 et les étalons utilisés pour effectuer l'étalonnage est retraçable au CNRC et/ou au NIST. Le degré d'incertitude est basé sur un niveau de confiance=95%, K=2.

DATE D'ÉTALONNAGE / ÉMISSION DU CERTIFICAT	
Date d'Étalonnage:	6 Février 2015
Date du prochain Étalonnage:	6 Février 2016
Date d'émission du certificat:	6 Février 2015

CONFORMITÉ D'ÉTALONNAGE	Avant	Après
Conforme:	X	X
Non Conforme:		

Le Service d'évaluation des laboratoires d'étalonnage (CLAS) du Conseil national de recherches du Canada (CNRC) a évalué et certifié la capacité d'étalonnage du laboratoire et la traçabilité au Système international d'unités (SI) ou à des étalons acceptables selon le CLAS. Le présent certificat d'étalonnage est délivré conformément aux conditions de certification du CLAS et aux conditions d'accréditation du Conseil canadien des normes (CCN). Numéro d'accréditation du CCN: # 669. Le CLAS et le CCN ne garantissent pas l'exactitude des étalonnages individuels effectués par les laboratoires accrédités.

Martin Langlais - Technicien

5F09101

Le droit d'auteur du présent certificat appartient à Inst. St-Laurent Inc et doit être reproduit intégralement, à moins d'une autorisation écrite de Inst. St-Laurent Inc.

Instrumentation Saint•Laurent inc.
Accrédité ISO 17025

CLAS IRC·CNRC
CLAS 2010-02

SCC Accredited LAB
LAB Accrédité CCN
N°669

80 rue de la montagne
St-Joseph du lac
(Québec), J0N 1M0
Tél: (450) 473-6169
Fax: (450) 473-5207
Email: inst.st-laurent@videotron.ca

CERTIFICAT D'ÉTALONNAGE

No.Certificat: CE-EM-006 06/02/15

CLIENT	
Compagnie:	Services Polytests Inc
Adresse:	695 B rue Gaudette
	St-Jean-sur-Richelieu, Québec, J3B 7S7

SPÉCIFICATION DE CALIBRATION	
Procédure de service:	4IN9106
Précision requise:	+\-0.25"H2O
Fréquence d'étalonnage: (jours)	365

SPÉCIFICATION DE L'INSTRUMENT			
Type d'instrument:	Indicateur	**Type d'entrée:**	Pression
Manufacturier:	Dwyer	**Type de sortie:**	Digitale
No. Model:	MS-321-LCD	**Type de mesure:**	Pression
No. Série:	E47U020014	**Gamme:**	0-0.5"H2O
Emplacement:	N.A.	**Conditions Enviro:**	Normale

SPÉCIFICATION DE L'ÉTALON			
Étalon Utilisé:	Setra	**No. du certificat d'étalonnage:**	AC15011147-2784759
No. Série:	2784759	**Dernière date d'étalonnage:**	15-Jan-15
Certificat fait par:	Alpha Controls	**Prochaine date d'étalonnage:**	15-Jan-16
Commentaire:			

RÉSULTAT D'ÉTALONNAGE

Entrée Source	Valeur Donnée	Valeur Actuelle	Erreur de Déviation	Valeur après Étalonnage	Incertitude Élargie	Commentaire
0.0000 "H2O	0.000 "H2O	0.000 "H2O	0.000 "H2O	0.000 "H2O	0.25 "H2O	
0.1500 "H2O	0.150 "H2O	0.145 "H2O	-0.005 "H2O	0.145 "H2O	0.25 "H2O	
0.2500 "H2O	0.250 "H2O	0.242 "H2O	-0.008 "H2O	0.242 "H2O	0.25 "H2O	
0.3500 "H2O	0.350 "H2O	0.347 "H2O	-0.003 "H2O	0.347 "H2O	0.25 "H2O	
0.5000 "H2O	0.500 "H2O	0.498 "H2O	-0.002 "H2O	0.498 "H2O	0.25 "H2O	

Conditions Environnementales: Température: 20 °C Humidité: 28 %RH

Type d'Étalonnage:

Instrumentation St-Laurent Inc. Certifie que l'instrument ci-haut, rencontre ou excède les spécifications établies par le fabriquant. Le système qualité de l'entreprise est conforme aux exigences de la norme ISO 17025 et les étalons utilisés pour effectuer l'étalonnage est retraçable au CNRC et/ou au NIST. Le degré d'incertitude est basé sur un niveau de confiance=95%, K=2.

DATE D'ÉTALONNAGE / ÉMISSION DU CERTIFICAT	
Date d'Étalonnage:	6 Février 2015
Date du prochain Étalonnage:	6 Février 2016
Date d'émission du certificat:	6 Février 2015

CONFORMITÉ D'ÉTALONNAGE	Avant	Après
Conforme:	X	X
Non Conforme:		

Le Service d'évaluation des laboratoires d'étalonnage (CLAS) du Conseil national de recherches du Canada (CNRC) a évalué et certifié la capacité d'étalonnage du laboratoire et la traçabilité au Système international d'unités (SI) ou à des étalons acceptables selon le CLAS. Le présent certificat d'étalonnage est délivré conformément aux conditions de certification du CLAS et aux conditions d'accréditation du Conseil canadien des normes (CCN). Numéro d'accréditation du CCN: # 669. Le CLAS et le CCN ne garantissent pas l'exactitude des étalonnages individuels effectués par les laboratoires accrédités.

Martin Langlais - Technicien

2015-02-16

5F09106

Le droit d'auteur du présent certificat appartient à Inst. St-Laurent Inc et doit être reproduit intégralement, à moins d'une autorisation écrite de Inst. St-Laurent Inc.

Instrumentation Saint•Laurent inc.
Accrédité ISO 17025

CLAS NRC·CNRC
CLAS 2010-02

SCC Accredited LAB
LAB Accrédité CCN
N°669

80 rue de la montagne
St-Joseph du lac
(Québec), J0N 1M0
Tél: (450) 473-6169
Fax: (450) 473-5207
Email: inst.st-laurent@videotron.ca

CERTIFICAT D'ÉTALONNAGE

No.Certificat: CE-EM-007 06/02/15

CLIENT	
Compagnie:	Services Polytests Inc
Adresse:	695 B rue Gaudette
	St-Jean-sur-Richelieu, Québec, J3B 7S7

SPÉCIFICATION DE CALIBRATION	
Procédure de service:	4IN9106
Précision requise:	+\- 0.25"H2O
Fréquence d'étalonnage: (jours)	365

SPÉCIFICATION DE L'INSTRUMENT			
Type d'instrument:	Indicateur	**Type d'entrée:**	Pression
Manufacturier:	Dwyer	**Type de sortie:**	Digitale
No. Model:	MS-321-LCD	**Type de mesure:**	Pression
No. Série:	E23S020111/12	**Gamme:**	0-0.5"H2O
Emplacement:	N.A.	**Conditions Enviro:**	Normale

SPÉCIFICATION DE L'ÉTALON			
Étalon Utilisé:	Setra	**No. du certificat d'étalonnage:**	AC15011147-2784759
No. Série:	2784759	**Dernière date d'étalonnage:**	15-Jan-15
Certificat fait par:	Alpha Controls	**Prochaine date d'étalonnage:**	15-Jan-16
Commentaire:			

RÉSULTAT D'ÉTALONNAGE

Entrée Source	Valeur Donnée	Valeur Actuelle	Erreur de Déviation	Valeur après Étalonnage	Incertitude Élargie	Commentaire
0.0000 "H2O	0.0000 "H2O	0.0000 "H2O	0.0000 "H2O	0.0000 "H2O	0.25 "H2O	ajuste span
0.1500 "H2O	0.1500 "H2O	0.1462 "H2O	-0.0038 "H2O	0.1485 "H2O	0.25 "H2O	
0.2500 "H2O	0.2500 "H2O	0.2444 "H2O	-0.0056 "H2O	0.2488 "H2O	0.25 "H2O	
0.3500 "H2O	0.3500 "H2O	0.3447 "H2O	-0.0053 "H2O	0.3494 "H2O	0.25 "H2O	
0.5000 "H2O	0.5000 "H2O	0.4968 "H2O	-0.0032 "H2O	0.4998 "H2O	0.25 "H2O	

Conditions Environnementales: Température: 20 °C Humidité: 28 %RH

Type d'Étalonnage:

Instrumentation St-Laurent Inc. Certifie que l'instrument ci-haut, rencontre ou excède les spécifications établies par le fabriquant. Le système qualité de l'entreprise est conforme aux exigences de la norme ISO 17025 et les étalons utilisés pour effectuer l'étalonnage est retraçable au CNRC et/ou au NIST. Le degré d'incertitude est basé sur un niveau de confiance=95%, K=2.

DATE D'ÉTALONNAGE / ÉMISSION DU CERTIFICAT	
Date d'Étalonnage:	6 Février 2015
Date du prochain Étalonnage:	6 Février 2016
Date d'émission du certificat:	6 Février 2015

CONFORMITÉ D'ÉTALONNAGE	Avant	Après
Conforme:	X	X
Non Conforme:		

Le Service d'évaluation des laboratoires d'étalonnage (CLAS) du Conseil national de recherches du Canada (CNRC) a évalué et certifié la capacité d'étalonnage du laboratoire et la traçabilité au Système international d'unités (SI) ou à des étalons acceptables selon le CLAS. Le présent certificat d'étalonnage est délivré conformément aux conditions de certification du CLAS et aux conditions d'accréditation du Conseil canadien des normes (CCN). Numéro d'accréditation du CCN: # 669. Le CLAS et le CCN ne garantissent pas l'exactitude des étalonnages individuels effectués par les laboratoires accrédités.

Martin Langlais - Technicien

2015-02-16

5F09106

Le droit d'auteur du présent certificat appartient à Inst. St-Laurent Inc et doit être reproduit intégralement, à moins d'une autorisation écrite de Inst. St-Laurent Inc.

Instrumentation Saint•Laurent inc.
Accrédité ISO 17025

CLAS NRC-CNRC
CLAS 2010-02

SCC Accredited LAB
LAB Accrédité CCN
N°669

80 rue de la montagne
St-Joseph du lac
(Québec), J0N 1M0
Tél: (450) 473-6169
Fax: (450) 473-5207
Email: inst.st-laurent@videotron.ca

CERTIFICAT D'ÉTALONNAGE

No.Certificat: CE-EM-012 05/02/15

CLIENT	
Compagnie:	Services Polytests Inc
Adresse:	695 B rue Gaudette
	St-Jean-sur-Richelieu, Québec, J3B 7S7

SPÉCIFICATION DE CALIBRATION	
Procédure de service:	4IN9101
Précision requise:	+\- 2°C
Fréquence d'étalonnage: (jours)	365

SPÉCIFICATION DE L'INSTRUMENT			
Type d'instrument:	Enregistreur	**Type d'entrée:**	Divers
Manufacturier:	Keithley	**Type de sortie:**	Digitale
No. Model:	2750	**Type de mesure:**	Température
No. Série:	977470	**Gamme:**	Divers
Emplacement:	N.A.	**Conditions Enviro:**	Normale

SPÉCIFICATION DE L'ÉTALON			
Étalon Utilisé:	Fluke 744	**No. du certificat d'étalonnage:**	AC15011147-8180008
No. Série:	8180008	**Dernière date d'étalonnage:**	15-Jan-15
Certificat fait par:	Alpha Controls	**Prochaine date d'étalonnage:**	15-Apr-15
Commentaire:			

RÉSULTAT D'ÉTALONNAGE

Entrée Source	Valeur Donnée	Valeur Actuelle	Erreur de Déviation	Valeur après Étalonnage	Incertitude Élargie	Commentaire
Voir Commentaire						

Conditions Environnementales: Température: 20 °C Humidité: 24 %RH

Type d'Étalonnage: Data Acquisition system Conforme
Carte1: EM-185

Instrumentation St-Laurent Inc. Certifie que l'instrument ci-haut, rencontre ou excède les spécifications établies par le fabriquant. Le système qualité de l'entreprise est conforme aux exigences de la norme ISO 17025 et les étalons utilisés pour effectuer l'étalonnage est retraçable au CNRC et/ou au NIST. Le degré d'incertitude est basé sur un niveau de confiance=95%, K=2.

DATE D'ÉTALONNAGE / ÉMISSION DU CERTIFICAT	
Date d'Étalonnage:	5 Février 2015
Date du prochain Étalonnage:	5 Février 2016
Date d'émission du certificat:	5 Février 2015

CONFORMITÉ D'ÉTALONNAGE	Avant	Après
Conforme:	X	X
Non Conforme:		

Le Service d'évaluation des laboratoires d'étalonnage (CLAS) du Conseil national de recherches du Canada (CNRC) a évalué et certifié la capacité d'étalonnage du laboratoire et la traçabilité au Système international d'unités (SI) ou à des étalons acceptables selon le CLAS. Le présent certificat d'étalonnage est délivré conformément aux conditions de certification du CLAS et aux conditions d'accréditation du Conseil canadien des normes (CCN). Numéro d'accréditation du CCN: # 669. Le CLAS et le CCN ne garantissent pas l'exactitude des étalonnages individuels effectués par les laboratoires accrédités.

Martin Langlais - Technicien

2015-02-16

5F09101

Le droit d'auteur du présent certificat appartient à Inst. St-Laurent Inc et doit être reproduit intégralement, à moins d'une autorisation écrite de Inst. St-Laurent Inc.

Instrumentation Saint•Laurent inc.
Accrédité ISO 17025

CLAS NRC·CNRC
CLAS 2010-02

SCC Accredited LAB
LAB Accrédité CCN
N°669

80 rue de la montagne
St-Joseph du lac
(Québec), J0N 1M0
Tél: (450) 473-6169
Fax: (450) 473-5207
Email: inst.st-laurent@videotron.ca

CERTIFICAT D'ÉTALONNAGE

No.Certificat: CE-EM-015 05/02/15

CLIENT	
Compagnie:	Services Polytests Inc
Adresse:	695 B rue Gaudette
	St-Jean-sur-Richelieu, Québec, J3B 7S7

SPÉCIFICATION DE CALIBRATION	
Procédure de service:	4IN9101
Précision requise:	+\- 2°C
Fréquence d'étalonnage: (jours)	365

SPÉCIFICATION DE L'INSTRUMENT			
Type d'instrument:	Enregistreur	**Type d'entrée:**	Temp
Manufacturier:	Keithley	**Type de sortie:**	Digitale
No. Model:	7700	**Type de mesure:**	Température
No. Série:	1213648	**Gamme:**	Divers
Emplacement:	EM-047	**Conditions Enviro:**	Normale

SPÉCIFICATION DE L'ÉTALON			
Étalon Utilisé:	Fluke 744	**No. du certificat d'étalonnage:**	AC15011147-8180008
No. Série:	8180008	**Dernière date d'étalonnage:**	15-Jan-15
Certificat fait par:	Alpha Controls	**Prochaine date d'étalonnage:**	15-Apr-15
Commentaire:			

RÉSULTAT D'ÉTALONNAGE

Entrée Source	Valeur Donnée	Valeur Actuelle	Erreur de Déviation	Valeur après Étalonnage	Incertitude Élargie	Commentaire
-190.0 °C	-190.0 °C	-190.3 °C	-0.3 °C	-190.3 °C	1.0 °C	Input#1TypeK
0.0 °C	0.0 °C	-0.2 °C	-0.2 °C	-0.2 °C	1.0 °C	Input#1TypeK
750.0 °C	750.0 °C	749.8 °C	-0.2 °C	749.8 °C	1.0 °C	Input#1TypeK
100.0 °C	100.0 °C	99.9 °C	-0.1 °C	99.9 °C	1.0 °C	Input#2 TypeJ
100.0 °C	100.0 °C	100.0 °C	0.0 °C	100.0 °C	1.0 °C	Input#3 TypeJ
100.0 °C	100.0 °C	99.9 °C	-0.1 °C	99.9 °C	1.0 °C	Input#4 TypeJ
100.0 °C	100.0 °C	99.9 °C	-0.1 °C	99.9 °C	1.0 °C	Input#5TypeJ
100.0 °C	100.0 °C	99.9 °C	-0.1 °C	99.9 °C	1.0 °C	Input#6TypeJ
100.0 °C	100.0 °C	99.9 °C	-0.1 °C	99.9 °C	1.0 °C	Input#7TypeJ
100.0 °C	100.0 °C	99.9 °C	-0.1 °C	99.9 °C	1.0 °C	Input#8TypeJ
100.0 °C	100.0 °C	99.9 °C	-0.1 °C	99.9 °C	1.0 °C	Input#9TypeJ
100.0 °C	100.0 °C	99.9 °C	-0.1 °C	99.9 °C	1.0 °C	Input#10TypeJ
100.0 °C	100.0 °C	99.7 °C	-0.3 °C	99.7 °C	1.0 °C	Input#11TypeJ
100.0 °C	100.0 °C	99.8 °C	-0.2 °C	99.8 °C	1.0 °C	Input#12TypeJ
100.0 °C	100.0 °C	99.8 °C	-0.2 °C	99.8 °C	1.0 °C	Input#13 TypeJ
100.0 °C	100.0 °C	99.8 °C	-0.2 °C	99.8 °C	1.0 °C	Input#14TypeJ
100.0 °C	100.0 °C	99.9 °C	-0.1 °C	99.9 °C	1.0 °C	Input#15 TypeJ
100.0 °C	100.0 °C	99.9 °C	-0.1 °C	99.9 °C	1.0 °C	Input#16TypeJ
100.0 °C	100.0 °C	99.9 °C	-0.1 °C	99.9 °C	1.0 °C	Input#17TypeJ
100.0 °C	100.0 °C	99.9 °C	-0.1 °C	99.9 °C	1.0 °C	Input#18TypeJ
100.0 °C	100.0 °C	99.9 °C	-0.1 °C	99.9 °C	1.0 °C	Input#19TypeJ
100.0 °C	100.0 °C	100.1 °C	0.1 °C	100.1 °C	1.0 °C	Input#20TypeJ
12.000 mA	12.000 mA	12.001 mA	0.001 mA	12.001 mA	1.00 mA	Input#21
12.000 mA	12.000 mA	12.002 mA	0.002 mA	12.002 mA	1.00 mA	Input#22

Conditions Environnementales: Température: 20 °C Humidité: 24 %RH

2015-02-16 5F09101

Le droit d'auteur du présent certificat appartient à Inst. St-Laurent Inc et doit être reproduit intégralement, à moins d'une autorisation écrite de Inst. St-Laurent Inc.

Instrumentation Saint•Laurent inc.
Accrédité ISO 17025

CLAS NRC·CNRC
CLAS 2010-02

SCC Accredited LAB
LAB Accrédité CCN
N°669

80 rue de la montagne
St-Joseph du lac
(Québec), J0N 1M0
Tél: (450) 473-6169
Fax: (450) 473-5207
Email: inst.st-laurent@videotron.ca

CERTIFICAT D'ÉTALONNAGE

No.Certificat: CE-EM-015 05/02/15

CLIENT	
Compagnie:	Services Polytests Inc
Adresse:	695 B rue Gaudette
	St-Jean-sur-Richelieu, Québec, J3B 7S7

SPÉCIFICATION DE CALIBRATION	
Procédure de service:	4IN9101
Précision requise:	+\- 2°C
Fréquence d'étalonnage: (jours)	365

SPÉCIFICATION DE L'INSTRUMENT			
Type d'instrument:	Enregistreur	**Type d'entrée:**	Temp
Manufacturier:	Keithley	**Type de sortie:**	Digitale
No. Model:	7700	**Type de mesure:**	Température
No. Série:	1213648	**Gamme:**	Divers
Emplacement:	EM-047	**Conditions Enviro:**	Normale

Type d'Étalonnage:

Instrumentation St-Laurent Inc. Certifie que l'instrument ci-haut, rencontre ou excède les spécifications établies par le fabriquant. Le système qualité de l'entreprise est conforme aux exigences de la norme ISO 17025 et les étalons utilisés pour effectuer l'étalonnage est retraçable au CNRC et/ou au NIST. Le degré d'incertitude est basé sur un niveau de confiance=95%, K=2.

DATE D'ÉTALONNAGE / ÉMISSION DU CERTIFICAT	
Date d'Étalonnage:	5 Février 2015
Date du prochain Étalonnage:	5 Février 2016
Date d'émission du certificat:	5 Février 2015

CONFORMITÉ D'ÉTALONNAGE	Avant	Après
Conforme:	X	X
Non Conforme:		

Le Service d'évaluation des laboratoires d'étalonnage (CLAS) du Conseil national de recherches du Canada (CNRC) a évalué et certifié la capacité d'étalonnage du laboratoire et la traçabilité au Système international d'unités (SI) ou à des étalons acceptables selon le CLAS. Le présent certificat d'étalonnage est délivré conformément aux conditions de certification du CLAS et aux conditions d'accréditation du Conseil canadien des normes (CCN). Numéro d'accréditation du CCN: # 669. Le CLAS et le CCN ne garantissent pas l'exactitude des étalonnages individuels effectués par les laboratoires accrédités.

Martin Langlais - Technicien

5F09101

Le droit d'auteur du présent certificat appartient à Inst. St-Laurent Inc et doit être reproduit intégralement, à moins d'une autorisation écrite de Inst. St-Laurent Inc.

Instrumentation Saint•Laurent inc.
Accrédité ISO 17025

CLAS NRC·CNRC
CLAS 2010-02

SCC Accredited LAB
LAB Accrédité CCN
N°669

80 rue de la montagne
St-Joseph du lac
(Québec), J0N 1M0
Tél: (450) 473-6169
Fax: (450) 473-5207
Email: inst.st-laurent@videotron.ca

CERTIFICAT D'ÉTALONNAGE

No.Certificat: CE-EM-047 05/02/15

CLIENT	
Compagnie:	Services Polytests Inc
Adresse:	695 B rue Gaudette
	St-Jean-sur-Richelieu, Québec, J3B 7S7

SPÉCIFICATION DE CALIBRATION	
Procédure de service:	4IN9101
Précision requise:	+\-2°C
Fréquence d'étalonnage: (jours)	365

SPÉCIFICATION DE L'INSTRUMENT			
Type d'instrument:	Enregistreur	**Type d'entrée:**	Temp
Manufacturier:	Keithley	**Type de sortie:**	Digitale
No. Model:	2700	**Type de mesure:**	Température
No. Série:	1217093	**Gamme:**	Divers
Emplacement:	N.A.	**Conditions Enviro:**	Normale

SPÉCIFICATION DE L'ÉTALON			
Étalon Utilisé:	Fluke 744	**No. du certificat d'étalonnage:**	AC15011147-8180008
No. Série:	8180008	**Dernière date d'étalonnage:**	15-Jan-15
Certificat fait par:	Alpha Controls	**Prochaine date d'étalonnage:**	15-Apr-15
Commentaire:			

RÉSULTAT D'ÉTALONNAGE

Entrée Source	Valeur Donnée	Valeur Actuelle	Erreur de Déviation	Valeur après Étalonnage	Incertitude Élargie	Commentaire
Voir Commentaire						

Conditions Environnementales: Température: 20 °C Humidité: 24 %RH

Type d'Étalonnage: Data Acquisition system Conforme
Carte1: EM-154
Carte2: EM-015

Instrumentation St-Laurent Inc. Certifie que l'instrument ci-haut, rencontre ou excède les spécifications établies par le fabriquant. Le système qualité de l'entreprise est conforme aux exigences de la norme ISO 17025 et les étalons utilisés pour effectuer l'étalonnage est retraçable au CNRC et/ou au NIST. Le degré d'incertitude est basé sur un niveau de confiance=95%, K=2.

DATE D'ÉTALONNAGE / ÉMISSION DU CERTIFICAT	
Date d'Étalonnage:	5 Février 2015
Date du prochain Étalonnage:	5 Février 2016
Date d'émission du certificat:	5 Février 2015

CONFORMITÉ D'ÉTALONNAGE	Avant	Après
Conforme:	X	X
Non Conforme:		

Le Service d'évaluation des laboratoires d'étalonnage (CLAS) du Conseil national de recherches du Canada (CNRC) a évalué et certifié la capacité d'étalonnage du laboratoire et la traçabilité au Système international d'unités (SI) ou à des étalons acceptables selon le CLAS. Le présent certificat d'étalonnage est délivré conformément aux conditions de certification du CLAS et aux conditions d'accréditation du Conseil canadien des normes (CCN). Numéro d'accréditation du CCN: # 669. Le CLAS et le CCN ne garantissent pas l'exactitude des étalonnages individuels effectués par les laboratoires accrédités.

Martin Langlais - Technicien

2015-02-15

5F09101

Le droit d'auteur du présent certificat appartient à Inst. St-Laurent Inc et doit être reproduit intégralement, à moins d'une autorisation écrite de Inst. St-Laurent Inc.

DISPERSION
Laboratoire • Laboratory

CLAS
NRC·CNRC
CLAS 2010-01

CERTIFICAT D'ÉTALONNAGE

108-86 Boulevard Des Entreprises, Boisbriand, Québec J7G 2T3
www.dispersion.ca 1.866.390.5066

Client :	Polytests	**No. du Certificat :**	**122-2E3F09-151-1649**
Adresse :	695 B rue Gaudette St-Jean-sur-Richelieu, QC J3B7S7	**Date d'étalonnage :**	14-09-2015

Technicien :
Auclair, François

Directeur de Service

Auclair, François

DESCRIPTION DU SERVICE:

Modèle de Balance :	AR2140	**Methode :**	ISO 17025
Manufacturier :	Ohaus	**Date d'approbation :**	14-09-2015
Numéro de Série :	M3658329010091	**Date prochain étalonnage :**	14-09-2016
Numéro d'identification :	EM-051	**Accrédtation CCN n. :**	668
Capacité :	210g	**Certification CLAS n. :**	2010-01
Résolution:	0.0001g		

Condition d'essai :	Temp °C:	21.3	Pression kPa:	100.5	Humidité %:	69.2

Note: Les conditions environnementales ne sont pas utilisées dans le calcul de l'incertitude.

CETTE BALANCE RENCONTRE LES SPÉCIFICATIONS SUIVANTES:

Type de test :	**Manufacturier**
Excentricité:	☑ Oui ☐ Non
Linéarité:	☑ Oui ☐ Non
Sensibilité:	☑ Oui ☐ Non
Répétabilité:	☑ Oui ☐ Non

NOTES:

Cette balance a été certifiée selon la procédure de travail PDL-09-MG-010 (certification de balance analytique et à plateau) et la et la procédure PDL-09-MG-012 (détermination des incertitudes de pesées). Nos étalons sont certifiés à chaque année. Le droit d'auteur du présent certificat appartient au laboratoire délivreur et doit être reproduit intégralement, à moins d'une autorisation écrite du laboratoire délivreur.

2015-09-15

DISPERSION
Laboratoire • Laboratory

CLAS
NRC·CNRC
CLAS 2010-01

CERTIFICAT D'ÉTALONNAGE

108-86 Boulevard Des Entreprises, Boisbriand, Québec J7G 2T3
www.dispersion.ca 1.866.390.5066

Client :	Polytests	**No. du Certificat :**	**122-2E3F09-151-1649**
Adresse :	695 B rue Gaudette	**Accrédtation CCN n. :**	668
	St-Jean-sur-Richelieu, QC	**Certification CLAS n. :**	2010-01
	J3B7S7	**Modèle de Balance :**	AR2140
		Date d'étalonnage :	14-09-2015
Méthode :	ISO 17025	**Date du prochain étalonnage :**	14-09-2016

TEST D'EXCENTRICITÉ:

Poids Test: 100 g Tolérance 0.0004 g
(Note: Le Poids Test est taré au centre du plateau de pesée)

Position	Avant Ajustement	Après Ajustement
1: Centre:	0.0000 g	---
2: Avant Gauche:	0.0000 g	---
3: Arrière Gauche:	0.0000 g	---
4: Arrière Droit:	0.0000 g	---
5: Avant Droit:	0.0000 g	---
Résultats	0.0000 g	---
STATUT	**CONFORME**	**N/A**

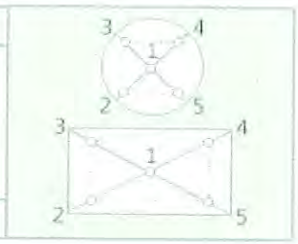

TEST DE LINÉARITÉ:

Méthode: Substitution Plage: 210 g Poids Test: 50 g Tolérance: 0.0002 g

Pré-Charge	**Avant Ajustement**	**Après Ajustement**
0.0000 g	50.0003 g	---
50.0000 g	49.9999 g	---
100.0000 g	49.9999 g	---
150.0000 g	50.0003 g	---
---	---	---
---	---	---
Résultats	**0.00020 g**	**---**
STATUT	**CONFORME**	**N/A**

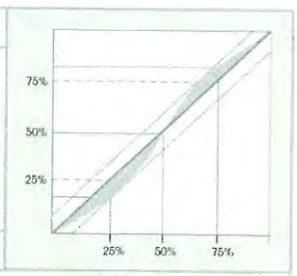

TEST DE SENSIBILITÉ:

Valeur de masse conventionnelle: 199.9998 g Tolérance: 0.0004 g

	Avant Ajustement	**Après Ajustement**
Lecture:	199.9999 g	---
Résultats:	**0.0001 g**	**---**
STATUT	**CONFORME**	**N/A**

$$S = \frac{\Delta W}{\Delta m}$$

DISPERSION
Laboratoire • Laboratory

CLAS
NRC·CNRC
CLAS 2010-01

CERTIFICAT D'ÉTALONNAGE

108-86 Boulevard Des Entreprises, Boisbriand, Québec J7G 2T3
www.dispersion.ca 1.866.390.5066

Client :	Polytests	**No. du Certificat :**	**122-2E3F09-151-1649**
Adresse :	695 B rue Gaudette	**Accrédtation CCN n. :**	668
	St-Jean-sur-Richelieu, QC	**Certification CLAS n. :**	2010-01
	J3B7S7	**Modèle de Balance :**	AR2140
		Date d'étalonnage :	14-09-2015
Méthode :	ISO 17025	**Date du prochain étalonnage :**	14-09-2016

TEST DE RÉPÉTABILITÉ:

AVANT AJUSTEMENT:

Charge Utilisée:
100.0000 g

Tolérance:
0.00010 g

Résolution d'affichage:
0.0001 g

Moyenne:
100.00041 g

Écart-type:
0.00003 g

#	Vide	Chargé	Différence
1	0.0000 g	100.0004 g	100.0004 g
2	0.0000 g	100.0005 g	100.0005 g
3	0.0000 g	100.0004 g	100.0004 g
4	0.0000 g	100.0004 g	100.0004 g
5	0.0000 g	100.0004 g	100.0004 g
6	0.0000 g	100.0004 g	100.0004 g
7	0.0000 g	100.0004 g	100.0004 g
8	0.0000 g	100.0004 g	100.0004 g
9	0.0000 g	100.0004 g	100.0004 g
10	0.0000 g	100.0004 g	100.0004 g
		Statut :	**CONFORME**

APRÈS AJUSTEMENT:

Charge Utilisée:

Tolérance:
0.00010 g

Résolution d'affichage:
0.0001 g

Moyenne:

Écart-type:

#	Vide	Chargé	Différence
1	---	---	---
2	---	---	---
3	---	---	---
4	---	---	---
5	---	---	---
6	---	---	---
7	---	---	---
8	---	---	---
9	---	---	---
10	---	---	---
		Statut :	**N/A**

DISPERSION
Laboratoire • Laboratory

CLAS
NRC·CNRC
CLAS 2010-01

108-86 Boulevard Des Entreprises, Boisbriand, Québec J7G 2T3
www.dispersion.ca 1.866.390.5066

CERTIFICAT D'ÉTALONNAGE

INCERTITUDE AVANT AJUSTEMENT :

$$Uc = \sqrt{\left(u_{(cr)}{}^2 + s_p{}^2 + u_{(l)}{}^2 + u_{(dr)}{}^2 + u_{(s)}{}^2\right)}$$

u(cr) = Incertitude reliée à l'étalon utilisé
Sp = Incertitude de l'écart-type
u(l) = Incertitude associée à la linéarité
u(dr) = Incertitude associée à résolution si Sp = 0
u(s) = Incertitude liée à la sensibilité (span)

Valeur	Incertitude	Incertitude (%)
12.5000 g	0.00016 g	0.001288 %
25.0000 g	0.00016 g	0.000650 %
50.0000 g	0.00017 g	0.000336 %
100.0000 g	0.00019 g	0.000189 %
200.0000 g	0.00048 g	0.000238 %

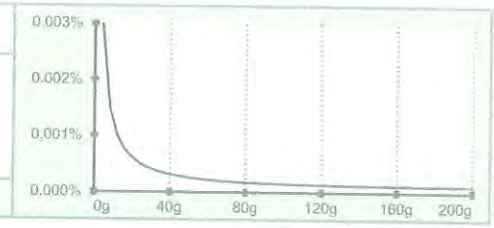

INCERTITUDE APRÈS AJUSTEMENT :

Valeur	Incertitude	Incertitude (%)
---	---	---
---	---	---
---	---	---
---	---	---

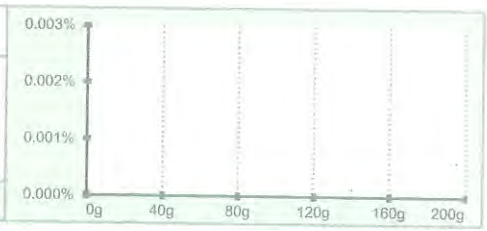

NOTES :

De ces valeurs d'incertitudes, seule la valeur surlignée est calculée selon ISO17025:2005, les autres étant estimées jusqu'au résultat de l'incertitude minimale. Dans le calcul de cette l'incertitude, l'écart-type utilisé est de 0,577d (où d est la précision d'affichage de la balance) lorsque cet écart-type est plus inférieur à 0,577d.

DISPERSION
Laboratoire • Laboratory

CLAS
NRC·CNRC
CLAS 2010-01

CERTIFICAT D'ÉTALONNAGE

108-86 Boulevard Des Entreprises, Boisbriand, Québec J7G 2T3
www.dispersion.ca 1.866.390.5066

RÉFÉRENCE

ENSEMBLE DE RÉFÉRENCE:

Référence	No de série	Fabricant	Date d'étalonnage
1mg - 5kg	DK000A161	Dispersion Laboratoire	21-08-2015

INCERTITUDES:

Les incertitudes que nous retrouvons comprennent :

3. *L'incertitude associée à l'étalon utilisé.*
2. *L'incertitude associée à l'écart-type.*
1. *L'incertitude associée à l'opération de pesage.*
4. *L'incertitude associée à la résolution de l'appareil.*

L'incertitude de l'opération de pesage comprend la reproductibilité à long terme.

Les incertitudes précisées dans ce rapport sont des incertitudes élargies représentant un niveau de confiance d'approximativement 95 %, obtenu en multipliant ensemble l'incertitude-type composée par un facteur de couverture de k = 2. Pour de plus amples renseignements, veuillez consulter la publication GUM (Guide pour l'expression de l'incertitude de mesure, édition de 1995).

TRAÇABILITÉ

Le Service d'évaluation de laboratoires d'étalonnage (CLAS) du Conseil national de recherches du Canada (CNRC) a évalué et a certifié des capacités d'étalonnage spécifiques de ce laboratoire et leur traçabilité à des étalons nationaux de mesure reconnus et au Système international d'unités (SI). Ce certificat d'étalonnage est émis conformément aux conditions de certification accordées par CLAS et aux conditions d'accréditation accordées par le Conseil canadien des normes (CCN). Le CLAS pas plus que le CCN ne peut garantir l'exactitude des étalonnages individuels effectués par des laboratoires accrédités.

REMARQUES:

DISPERSION
Laboratoire • Laboratory

CLAS
NRC·CNRC
CLAS 2010-01

CERTIFICAT D'ÉTALONNAGE

108-86 Boulevard Des Entreprises, Boisbriand, Québec J7G 2T3
www.dispersion.ca 1.866.390.5066

Client :	Polytests	**No. du Certificat :**	**123-259410-142**
Adresse :	695 B rue Gaudette St-Jean-sur-Richelieu, QC J3B7S7	**Date d'étalonnage :**	30-10-2014

Technicien :
Simard, Catherine

Technicienne Métrologie

Pierre Trépanier, Directeur laboratoire

DESCRIPTION DU SERVICE:

Description des masses :	ASTM E617	**Date d'approbation :**	03-11-2014
Classe de précision :	ASTM 6	**Date prochain étalonnage :**	03-11-2015
Densité :	7.95g/cm³	**Accrédtation CCN n. :**	668
Identification (si unique) :	EM-090	**Certification CLAS n. :**	2010-01

Condition d'essai :	Temp °C:	20.605	Pression kPa:	101.2	Humidité:	46.785

NOTES:

Pour l'étalonnage des masses, nous utilisons la procédure "Comparaison individuelle" PDL-09-MG-001 et la procédure "Détermination des incertitudes" PDL-09-MG-002. Le droit d'auteur du présent certificat appartient au laboratoire délivreur et doit être reproduit intégralement, à moins d'une autorisation écrite du laboratoire délivreur.

REMARQUES:

2014-11-05

DISPERSION
Laboratoire • Laboratory

CLAS
NRC·CNRC
CLAS 2010-01

CERTIFICAT D'ÉTALONNAGE

108-86 Boulevard Des Entreprises, Boisbriand, Québec J7G 2T3
www.dispersion.ca 1.866.390.5066

Client :	Polytests	**No. du Certificat :**	**123-259410-142**
Adresse :	695 B rue Gaudette	**Accrédtation CCN n. :**	668
	St-Jean-sur-Richelieu, QC	**Certification CLAS n. :**	2010-01
	J3B7S7	**Classe d'exactitude :**	ASTM 6
		Date d'étalonnage :	30-10-2014
Masse :	2 kg	**Date du prochain étalonnage :**	03-11-2015

RÉSULTAT DE L'ÉTALONNAGE, MASSE CONVENTIONNELLE:

Valeur Nominale	No de série	No d'inventaire	Masse conventionnelle	Masse conventionnelle après ajustement	Tolérance ± (mg)	Incertitudes ± (mg)
2 kg		EM-090	2.0001350 kg		200 mg	2.0 mg

S'applique seulement pour les masses qui ont été ajustées **Hors-tolérance pour la classe spécifiée**

2014-11-05

DISPERSION
Laboratoire • Laboratory

CLAS
ARC·CNRC
CLAS 2010-01

CERTIFICAT D'ÉTALONNAGE

108-86 Boulevard Des Entreprises, Boisbriand, Québec J7G 2T3
www.dispersion.ca 1.866.390.5066

Client :	Polytests	**No. du Certificat :**	**123-259410-142**
Adresse :	695 B rue Gaudette St-Jean-sur-Richelieu, QC J3B7S7	**Accrédtation CCN n. :**	668
		Certification CLAS n. :	2010-01
		Classe d'exactitude :	ASTM 6
		Date d'étalonnage :	30-10-2014
Masse :	2 kg	**Date du prochain étalonnage :**	03-11-2015

RÉSULTAT DE L'ÉTALONNAGE DES POIDS, CORRECTIONS:

Valeur Nominale	No de série	No d'inventaire	Masse conventionnelle Correction	Masse conventionnelle Correction après ajustement	Tolérance ± (mg)	Incertitudes ± (mg)
2 kg		EM-090	135.0 mg		200 mg	2.0 mg

S'applique seulement pour les masses qui ont été ajustées **Hors-tolérance pour la classe spécifiée**

2014-11-05

DISPERSION
Laboratoire • Laboratory

CLAS
NRC·CNRC
CLAS 2010-01

CERTIFICAT D'ÉTALONNAGE

108-86 Boulevard Des Entreprises, Boisbriand, Québec J7G 2T3
www.dispersion.ca 1.866.390.5066

BALANCES UTILISÉES

Pour l'étalonnage manuel :

> 5 kg à 25 kg :	Mettler Toledo XP32003L, SNR 1123271214, max. 32100 g, d = 0.005 g
> 1 kg à 5 kg	Mettler Toledo PR5003, SNR 1115311634, max. 5100 g, d = 0.001 g
> 300 g à 2 kg :	Mettler Toledo XP2004S, SNR B131185222, max. 2100 g, d = 0.1 mg
> 100 g à 200 g :	Mettler Toledo AT201 SNR BA1115230146, max. 205 g, d = 0.01 mg
> 5 g à 100 g :	Mettler Toledo AX106 SNR 1127063924, max. 111 g, d = 1 µg
1 mg à 5 g :	Mettler UMX5, SNR 1121103055, max. 5.1 g, d = 0.1 µg

Pour l'étalonnage automatisé :

> 200 g à 1 kg :	Mettler Toledo AX1005 SNR 1127063210, max. 1109 g, d = 0.01 mg
> 5 g à 100 g :	Mettler Toledo AX106 SNR 1120143015, max. 111 g, d = 1 µg
1 mg à 5 g :	Mettler UMX5, SNR 1125140561, max. 5.1 g, d = 0.1 µg

Les balances sont vérifiées selon notre procédure de contrôle périodique PDL-11-MG-001.

INCERTITUDES:

Les incertitudes que nous retrouvons comprennent :

1. *L'incertitude associée à l'opération de pesage.*
2. *L'incertitude associée à la densité de l'air.*
3. *L'incertitude associée à l'étalon utilisé.*
4. *L'incertitude associée à la densité de la masse à être étalonnée.*

L'incertitude de l'opération de pesage comprend la reproductibilité à long terme.

Les incertitudes précisées dans ce rapport sont des incertitudes élargies représentant un niveau de confiance d'approximativement 95 %, obtenu en multipliant ensemble l'incertitude-type composée par un facteur de couverture de k = 2. Pour de plus amples renseignements, veuillez consulter la publication GUM (Guide pour l'expression de l'incertitude de mesure, édition de 1995).

TRAÇABILITÉ

Le Service d'évaluation de laboratoires d'étalonnage (CLAS) du Conseil national de recherches du Canada (CNRC) a évalué et a certifié des capacités d'étalonnage spécifiques de ce laboratoire et leur traçabilité à des étalons nationaux de mesure reconnus et au Système international d'unités (SI). Ce certificat d'étalonnage est émis conformément aux conditions de certification accordées par CLAS et aux conditions d'accréditation accordées par le Conseil canadien des normes (CCN). Le CLAS pas plus que le CCN ne peut garantir l'exactitude des étalonnages individuels effectués par des laboratoires accrédités.

2014-11-05

DISPERSION
Laboratoire • Laboratory

CLAS
NRC·CNRC
CLAS 2010-01

CERTIFICAT D'ÉTALONNAGE

108-86 Boulevard Des Entreprises, Boisbriand, Québec J7G 2T3
www.dispersion.ca 1.866.390.5066

RÉFÉRENCES UTILISÉES

Poids	No de série	Fabricant	Date d'étalonnage
20kg	69976	Troemner	18-03-2014
1kg - 1mg	MT-01	Mettler Toledo	04-09-2014
300g	96-0888-50-2	Denver Instrument Company	04-09-2014
2kg	96-0888-50-3	Denver Instrument Company	04-09-2014
2kg	129098	Mettler Toledo	04-09-2014
5kg	96-0888-50-3	Denver Instrument Company	04-09-2014
5kg	129099	Mettler Toledo	04-09-2014
10kg	129100	Mettler Toledo	14-08-2014

ÉTALONS CERTFIÉS PAR LE CNRC:

Poids	No de série	Fabricant	Date d'étalonnage
100g	95170	Mettler Toledo	19-08-2014
1kg	95171	Mettler Toledo	02-05-2014

RÉFÉRENCES DE LA STATION ROBOTISÉE:

Poids	No de série	Fabricant	Date d'étalonnage
1kg - 1mg	DK000A133	Laboratoire Dispersion	04-09-2014
1kg - 1mg	DK000A132	Laboratoire Dispersion	01-02-2013

2014-11-05

DISPERSION
Laboratoire • Laboratory

CLAS
NRC·CNRC
CLAS 2010-01

CERTIFICAT D'ÉTALONNAGE

108-86 Boulevard Des Entreprises, Boisbriand, Québec J7G 2T3
www.dispersion.ca 1.866.390.5066

Client :	Polytests	**No. du Certificat :**	**122-2E3F09-151-1648**
Adresse :	695 B rue Gaudette St-Jean-sur-Richelieu, QC J3B7S7	**Date d'étalonnage :**	14-09-2015

Technicien :
Auclair, François

Directeur de Service

Auclair, François

DESCRIPTION DU SERVICE:

Modèle de la Base :	4X4HP-10K	**Capacité :**	400kg
Numéro de Série Base:	C18395	**Methode:**	ISO 17025 / Class III
Modèle de Terminal:	IQ355	**Résolution:**	0.05kg
Numéro de Série Terminal:	164851	**Date d'approbation :**	14-09-2015
Numéro d'identification :	EM-137 + EM. 114 DP	**Date prochain étalonnage :**	14-09-2016

Condition d'essai :	Temp ºC:	20.1	Pression kPa:	100.5	Humidité %:	79.2

Note: Les conditions environnementales ne sont pas utilisées dans le calcul de l'incertitude.

CETTE BALANCE RENCONTRE LES SPÉCIFICATIONS SUIVANTES:

Type de test :	**Manufacturier**
Excentricité:	☑ Oui ☐ Non
Linéarité:	☑ Oui ☐ Non
Sensibilité:	☑ Oui ☐ Non
Répétabilité:	☑ Oui ☐ Non

NOTES:

Cette balance a été certifiée selon la procédure de travail PDL-09-MG-010 (certification de balance analytique et à plateau) et la et la procédure PDL-09-MG-012 (détermination des incertitudes de pesées). Nos étalons sont certifiés à chaque année. Le droit d'auteur du présent certificat appartient au laboratoire délivreur et doit être reproduit intégralement, à moins d'une autorisation écrite du laboratoire délivreur.

2015-09-15

DISPERSION
Laboratoire • Laboratory

CLAS
NRC·CNRC
CLAS 2010-01

CERTIFICAT D'ÉTALONNAGE

108-86 Boulevard Des Entreprises, Boisbriand, Québec J7G 2T3
www.dispersion.ca 1.866.390.5066

Client :	Polytests	**No. du Certificat :**	**122-2E3F09-151-1648**
Adresse :	695 B rue Gaudette	**Accrédtation CCN n. :**	668
	St-Jean-sur-Richelieu, QC	**Certification CLAS n. :**	2010-01
	J3B7S7	**Modèle de la Base :**	4X4HP-10K
		Date d'étalonnage :	14-09-2015
Méthode :	ISO 17025	**Date du prochain étalonnage :**	14-09-2016

TEST D'EXCENTRICITÉ:

Poids Test: 200 kg Tolérance 0.15 kg
(Note: Le Poids Test est taré au centre du plateau de pesée)

Position	Avant Ajustement	Après Ajustement
1: Centre:	0.00 kg	---
2: Avant Gauche:	0.05 kg	---
3: Arrière Gauche:	0.10 kg	---
4: Arrière Droit:	0.10 kg	---
5: Avant Droit:	0.05 kg	---
Résultats	0.10 kg	---
STATUT	**CONFORME**	**N/A**

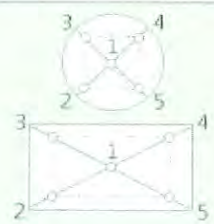

TEST DE LINÉARITÉ:

Méthode: Accumulation Plage: 400 kg Poids Test: 100 kg Tolérance: 0.10 kg

Pré-Charge	**Avant Ajustement**	**Après Ajustement**
0.00 kg	99.95 kg	---
0.00 kg	199.95 kg	---
0.00 kg	299.95 kg	---
0.00 kg	400.00 kg	---
---	---	---
---	---	---
Résultats	**0.050 kg**	**---**
STATUT	**CONFORME**	**N/A**

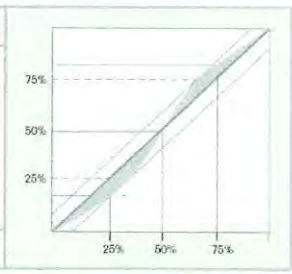

TEST DE SENSIBILITÉ:

Valeur de masse conventionnelle: 400.00 kg Tolérance: 0.25 kg

	Avant Ajustement	**Après Ajustement**
Lecture:	400.00 kg	---
Résultats:	**0.00 kg**	**---**
STATUT	**CONFORME**	**N/A**

$$S = \frac{\Delta W}{\Delta m}$$

DISPERSION
Laboratoire • Laboratory

CLAS
NRC·CNRC
CLAS 2010-01

CERTIFICAT D'ÉTALONNAGE

108-86 Boulevard Des Entreprises, Boisbriand, Québec J7G 2T3
www.dispersion.ca 1.866.390.5066

Client :	Polytests	**No. du Certificat :**	**122-2E3F09-151-1648**
Adresse :	695 B rue Gaudette	**Accrédtation CCN n. :**	668
	St-Jean-sur-Richelieu, QC	**Certification CLAS n. :**	2010-01
	J3B7S7	**Modèle de la Base :**	4X4HP-10K
		Date d'étalonnage :	14-09-2015
Méthode :	ISO 17025	**Date du prochain étalonnage :**	14-09-2016

TEST DE RÉPÉTABILITÉ:

AVANT AJUSTEMENT:

Charge Utilisée:
100.00 kg

Tolérance:
0.100 kg

Résolution d'affichage:
0.05 kg

Moyenne:
99.950 kg

Écart-type:
0.000 kg

#	Vide	Chargé	Différence
1	0.00 kg	99.95 kg	99.95 kg
2	0.00 kg	99.95 kg	99.95 kg
3	0.00 kg	99.95 kg	99.95 kg
4	0.00 kg	99.95 kg	99.95 kg
5	0.00 kg	99.95 kg	99.95 kg
6	0.00 kg	99.95 kg	99.95 kg
7	0.00 kg	99.95 kg	99.95 kg
8	0.00 kg	99.95 kg	99.95 kg
9	0.00 kg	99.95 kg	99.95 kg
10	0.00 kg	99.95 kg	99.95 kg
		Statut :	**CONFORME**

APRÈS AJUSTEMENT:

Charge Utilisée:

Tolérance:
0.100 kg

Résolution d'affichage:
0.05 kg

Moyenne:

Écart-type:

#	Vide	Chargé	Différence
1	---	---	---
2	---	---	---
3	---	---	---
4	---	---	---
5	---	---	---
6	---	---	---
7	---	---	---
8	---	---	---
9	---	---	---
10	---	---	---
		Statut :	**N/A**

DISPERSION
Laboratoire • Laboratory

CLAS
NRC·CNRC
CLAS 2010-01

CERTIFICAT D'ÉTALONNAGE

108-86 Boulevard Des Entreprises, Boisbriand, Québec J7G 2T3
www.dispersion.ca 1.866.390.5066

INCERTITUDE AVANT AJUSTEMENT :

$$Uc = \sqrt{\left(u_{(cr)}{}^2 + s_p{}^2 + u_{(l)}{}^2 + u_{(dr)}{}^2 + u_{(s)}{}^2\right)}$$

u(cr) = Incertitude reliée à l'étalon utilisé
Sp = Incertitude de l'écart-type
u(l) = Incertitude associée à la linéarité
u(dr) = Incertitude associée à résolution si Sp = 0
u(s) = Incertitude liée à la sensibilité (span)

Valeur	Incertitude	Incertitude (%)
25.00 kg	0.0627975 kg	0.251190 %
50.00 kg	0.0627975 kg	0.125595 %
100.00 kg	0.0627975 kg	0.062797 %
200.00 kg	0.0627975 kg	0.031399 %
400.00 kg	0.119 kg	0.029760 %

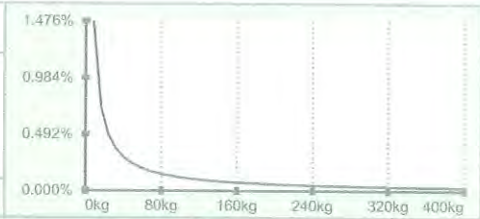

INCERTITUDE APRÈS AJUSTEMENT :

Valeur	Incertitude	Incertitude (%)
---	---	---
---	---	---
---	---	---
---	---	---

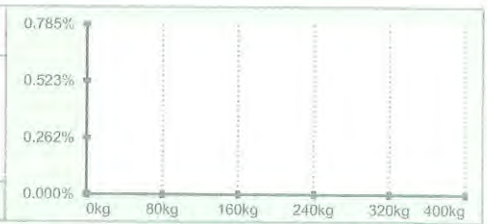

NOTES :

De ces valeurs d'incertitudes, seule la valeur surlignée est calculée selon ISO17025:2005, les autres étant estimées jusqu'au résultat de l'incertitude minimale. Dans le calcul de cette l'incertitude, l'écart-type utilisé est de 0,577d (où d est la précision d'affichage de la balance) lorsque cet écart-type est plus inférieur à 0,577d.

DISPERSION
Laboratoire • Laboratory

CLAS
NRC·CNRC
CLAS 2010-01

CERTIFICAT D'ÉTALONNAGE

108-86 Boulevard Des Entreprises, Boisbriand, Québec J7G 2T3
www.dispersion.ca 1.866.390.5066

RÉFÉRENCE

ENSEMBLE DE RÉFÉRENCE:

Référence	No de série	Fabricant	Date d'étalonnage
1mg - 5kg	DK000A161	Dispersion Laboratoire	21-08-2015

INCERTITUDES:

Les incertitudes que nous retrouvons comprennent :

3. *L'incertitude associée à l'étalon utilisé.*
2. *L'incertitude associée à l'écart-type.*
1. *L'incertitude associée à l'opération de pesage.*
4. *L'incertitude associée à la résolution de l'appareil.*

L'incertitude de l'opération de pesage comprend la reproductibilité à long terme.

Les incertitudes précisées dans ce rapport sont des incertitudes élargies représentant un niveau de confiance d'approximativement 95 %, obtenu en multipliant ensemble l'incertitude-type composée par un facteur de couverture de k = 2. Pour de plus amples renseignements, veuillez consulter la publication GUM (Guide pour l'expression de l'incertitude de mesure, édition de 1995).

TRAÇABILITÉ

Le Service d'évaluation de laboratoires d'étalonnage (CLAS) du Conseil national de recherches du Canada (CNRC) a évalué et a certifié des capacités d'étalonnage spécifiques de ce laboratoire et leur traçabilité à des étalons nationaux de mesure reconnus et au Système international d'unités (SI). Ce certificat d'étalonnage est émis conformément aux conditions de certification accordées par CLAS et aux conditions d'accréditation accordées par le Conseil canadien des normes (CCN). Le CLAS pas plus que le CCN ne peut garantir l'exactitude des étalonnages individuels effectués par des laboratoires accrédités.

REMARQUES:

Instrumentation Saint•Laurent inc.
Accrédité ISO 17025

CLAS NRC·CNRC
CLAS 2010-02

SCC Accredited LAB
LAB Accrédité CCN
N°669

80 rue de la montagne
St-Joseph du lac
(Québec), J0N 1M0
Tél: (450) 473-6169
Fax: (450) 473-5207
Email: inst.st-laurent@videotron.ca

CERTIFICAT D'ÉTALONNAGE

No.Certificat: CE-EM-124 06/02/15

CLIENT	
Compagnie:	Services Polytests Inc
Adresse:	695 B rue Gaudette
	St-Jean-sur-Richelieu, Québec, J3B 7S7

SPÉCIFICATION DE CALIBRATION	
Procédure de service:	4IN9106
Précision requise:	+\- 0.25"H2O
Fréquence d'étalonnage: (jours)	365

SPÉCIFICATION DE L'INSTRUMENT			
Type d'instrument:	Indicateur	**Type d'entrée:**	Pression
Manufacturier:	Dwyer	**Type de sortie:**	Digitale
No. Model:	MS-321-LCD	**Type de mesure:**	Pression
No. Série:	E39V060010/1	**Gamme:**	0-0.5"H2O
Emplacement:	N.A.	**Conditions Enviro:**	Normale

SPÉCIFICATION DE L'ÉTALON			
Étalon Utilisé:	Setra	**No. du certificat d'étalonnage:**	AC15011147-2784759
No. Série:	2784759	**Dernière date d'étalonnage:**	15-Jan-15
Certificat fait par:	Alpha Controls	**Prochaine date d'étalonnage:**	15-Jan-16
Commentaire:			

RÉSULTAT D'ÉTALONNAGE

Entrée Source	Valeur Donnée	Valeur Actuelle	Erreur de Déviation	Valeur après Étalonnage	Incertitude Élargie	Commentaire
0.0000 "H2O	0.0000 "H2O	0.0009 "H2O	0.0009 "H2O	0.0009 "H2O	0.25 "H2O	
0.1500 "H2O	0.1500 "H2O	0.1470 "H2O	-0.0030 "H2O	0.1470 "H2O	0.25 "H2O	
0.2500 "H2O	0.2500 "H2O	0.2480 "H2O	-0.0020 "H2O	0.2480 "H2O	0.25 "H2O	
0.3500 "H2O	0.3500 "H2O	0.3485 "H2O	-0.0015 "H2O	0.3485 "H2O	0.25 "H2O	
0.5000 "H2O	0.5000 "H2O	0.4990 "H2O	-0.0010 "H2O	0.4990 "H2O	0.25 "H2O	

Conditions Environnementales: Température: 20 °C Humidité: 28 %RH

Type d'Étalonnage:

Instrumentation St-Laurent Inc. Certifie que l'instrument ci-haut, rencontre ou excède les spécifications établies par le fabriquant. Le système qualité de l'entreprise est conforme aux exigences de la norme ISO 17025 et les étalons utilisés pour effectuer l'étalonnage est retraçable au CNRC et/ou au NIST. Le degré d'incertitude est basé sur un niveau de confiance=95%, K=2.

DATE D'ÉTALONNAGE / ÉMISSION DU CERTIFICAT	
Date d'Étalonnage:	6 Février 2015
Date du prochain Étalonnage:	6 Février 2016
Date d'émission du certificat:	6 Février 2015

CONFORMITÉ D'ÉTALONNAGE	Avant	Après
Conforme:	X	X
Non Conforme:		

Le Service d'évaluation des laboratoires d'étalonnage (CLAS) du Conseil national de recherches du Canada (CNRC) a évalué et certifié la capacité d'étalonnage du laboratoire et la traçabilité au Système international d'unités (SI) ou à des étalons acceptables selon le CLAS. Le présent certificat d'étalonnage est délivré conformément aux conditions de certification du CLAS et aux conditions d'accréditation du Conseil canadien des normes (CCN). Numéro d'accréditation du CCN: # 669. Le CLAS et le CCN ne garantissent pas l'exactitude des étalonnages individuels effectués par les laboratoires accrédités.

Martin Langlais - Technicien

2015-02-16

5F09106

Le droit d'auteur du présent certificat appartient à Inst. St-Laurent Inc et doit être reproduit intégralement, à moins d'une autorisation écrite de Inst. St-Laurent Inc.

Instrumentation Saint•Laurent inc.
Accrédité ISO 17025

CLAS MC·CNRC
CLAS 2010-02

SCC Accredited LAB
LAB Accrédité CCN
N°669

80 rue de la montagne
St-Joseph du lac
(Québec), J0N 1M0
Tél: (450) 473-6169
Fax: (450) 473-5207
Email: inst.st-laurent@videotron.ca

CERTIFICAT D'ÉTALONNAGE

No.Certificat: CE-EM-126 05/02/15

CLIENT	
Compagnie:	Services Polytests Inc
Adresse:	695 B rue Gaudette
	St-Jean-sur-Richelieu, Québec, J3B 7S7

SPÉCIFICATION DE CALIBRATION	
Procédure de service:	4IN9106
Précision requise:	+\- 1"Hg
Fréquence d'étalonnage: (jours)	365

SPÉCIFICATION DE L'INSTRUMENT			
Type d'instrument:	Manomètre	**Type d'entrée:**	Pression
Manufacturier:	Dwyer	**Type de sortie:**	Digitale
No. Model:	DPG200	**Type de mesure:**	Pression
No. Série:	N.A.	**Gamme:**	0-28"Hg
Emplacement:	N.A.	**Conditions Enviro:**	Normale

SPÉCIFICATION DE L'ÉTALON			
Étalon Utilisé:	Crystal XP2i 300	**No. du certificat d'étalonnage:**	AC14061448-864490
No. Série:	864490	**Dernière date d'étalonnage:**	27-Jun-14
Certificat fait par:	Alpha Controls	**Prochaine date d'étalonnage:**	27-Jun-15
Commentaire:			

RÉSULTAT D'ÉTALONNAGE

Entrée Source	Valeur Donnée	Valeur Actuelle	Erreur de Déviation	Valeur après Étalonnage	Incertitude Élargie	Commentaire
0.00 "Hg	0.00 "Hg	0.00 "Hg	0.00 "Hg	0.00 "Hg	1 "Hg	
-7.50 "Hg	-7.50 "Hg	-7.50 "Hg	0.00 "Hg	-7.50 "Hg	1 "Hg	
-15.00 "Hg	-15.00 "Hg	-15.10 "Hg	-0.10 "Hg	-15.10 "Hg	1 "Hg	
-22.50 "Hg	-22.50 "Hg	-22.74 "Hg	-0.24 "Hg	-22.74 "Hg	1 "Hg	
-28.00 "Hg	-28.00 "Hg	-28.34 "Hg	-0.34 "Hg	-28.34 "Hg	1 "Hg	

Conditions Environnementales: Température: 20 °C Humidité: 24 %RH

Type d'Étalonnage:

Instrumentation St-Laurent Inc. Certifie que l'instrument ci-haut, rencontre ou excède les spécifications établies par le fabriquant. Le système qualité de l'entreprise est conforme aux exigences de la norme ISO 17025 et les étalons utilisés pour effectuer l'étalonnage est retraçable au CNRC et/ou au NIST. Le degré d'incertitude est basé sur un niveau de confiance=95%, K=2.

DATE D'ÉTALONNAGE / ÉMISSION DU CERTIFICAT	
Date d'Étalonnage:	5 Février 2015
Date du prochain Étalonnage:	5 Février 2016
Date d'émission du certificat:	5 Février 2015

CONFORMITÉ D'ÉTALONNAGE	Avant	Après
Conforme:	X	X
Non Conforme:		

Le Service d'évaluation des laboratoires d'étalonnage (CLAS) du Conseil national de recherches du Canada (CNRC) a évalué et certifié la capacité d'étalonnage du laboratoire et la traçabilité au Système international d'unités (SI) ou à des étalons acceptables selon le CLAS. Le présent certificat d'étalonnage est délivré conformément aux conditions de certification du CLAS et aux conditions d'accréditation du Conseil canadien des normes (CCN). Numéro d'accréditation du CCN: # 669. Le CLAS et le CCN ne garantissent pas l'exactitude des étalonnages individuels effectués par les laboratoires accrédités.

Martin Langlais - Technicien

2015-02-16

5F09106

Le droit d'auteur du présent certificat appartient à Inst. St-Laurent Inc et doit être reproduit intégralement, à moins d'une autorisation écrite de Inst. St-Laurent Inc.

Instrumentation Saint•Laurent inc.
Accrédité ISO 17025

CLAS NRC·CNRC
CLAS 2010-02

SCC Accredited LAB
LAB Accrédité CCN
N°669

80 rue de la montagne
St-Joseph du lac
(Québec), J0N 1M0
Tél: (450) 473-6169
Fax: (450) 473-5207
Email: inst.st-laurent@videotron.ca

CERTIFICAT D'ÉTALONNAGE

No.Certificat: CE-EM-127 05/02/15

CLIENT	
Compagnie:	Services Polytests Inc
Adresse:	695 B rue Gaudette
	St-Jean-sur-Richelieu, Québec, J3B 7S7

SPÉCIFICATION DE CALIBRATION	
Procédure de service:	4IN9106
Précision requise:	+\- 1"Hg
Fréquence d'étalonnage: (jours)	365

SPÉCIFICATION DE L'INSTRUMENT			
Type d'instrument:	Manomètre	**Type d'entrée:**	Pression
Manufacturier:	Dwyer	**Type de sortie:**	Digitale
No. Model:	DPG200	**Type de mesure:**	Pression
No. Série:	N.A.	**Gamme:**	0-28"Hg
Emplacement:	N.A.	**Conditions Enviro:**	Normale

SPÉCIFICATION DE L'ÉTALON			
Étalon Utilisé:	Crystal XP2i 300	**No. du certificat d'étalonnage:**	AC14061448-864490
No. Série:	864490	**Dernière date d'étalonnage:**	27-Jun-14
Certificat fait par:	Alpha Controls	**Prochaine date d'étalonnage:**	27-Jun-15
Commentaire:			

RÉSULTAT D'ÉTALONNAGE

Entrée Source	Valeur Donnée	Valeur Actuelle	Erreur de Déviation	Valeur après Étalonnage	Incertitude Élargie	Commentaire
0.00 "Hg	0.00 "Hg	0.00 "Hg	0.00 "Hg	0.00 "Hg	1 "Hg	
-7.50 "Hg	-7.50 "Hg	-7.50 "Hg	0.00 "Hg	-7.50 "Hg	1 "Hg	
-15.00 "Hg	-15.00 "Hg	-15.01 "Hg	-0.01 "Hg	-15.01 "Hg	1 "Hg	
-22.50 "Hg	-22.50 "Hg	-22.51 "Hg	-0.01 "Hg	-22.51 "Hg	1 "Hg	
-28.00 "Hg	-28.00 "Hg	-28.04 "Hg	-0.04 "Hg	-28.04 "Hg	1 "Hg	

Conditions Environnementales: Température: 20 °C Humidité: 24 %RH

Type d'Étalonnage:

Instrumentation St-Laurent Inc. Certifie que l'instrument ci-haut, rencontre ou excède les spécifications établies par le fabriquant. Le système qualité de l'entreprise est conforme aux exigences de la norme ISO 17025 et les étalons utilisés pour effectuer l'étalonnage est retraçable au CNRC et/ou au NIST. Le degré d'incertitude est basé sur un niveau de confiance=95%, K=2.

DATE D'ÉTALONNAGE / ÉMISSION DU CERTIFICAT	
Date d'Étalonnage:	5 Février 2015
Date du prochain Étalonnage:	5 Février 2016
Date d'émission du certificat:	5 Février 2015

CONFORMITÉ D'ÉTALONNAGE	Avant	Après
Conforme:	X	X
Non Conforme:		

Le Service d'évaluation des laboratoires d'étalonnage (CLAS) du Conseil national de recherches du Canada (CNRC) a évalué et certifié la capacité d'étalonnage du laboratoire et la traçabilité au Système international d'unités (SI) ou à des étalons acceptables selon le CLAS. Le présent certificat d'étalonnage est délivré conformément aux conditions de certification du CLAS et aux conditions d'accréditation du Conseil canadien des normes (CCN). Numéro d'accréditation du CCN: # 669. Le CLAS et le CCN ne garantissent pas l'exactitude des étalonnages individuels effectués par les laboratoires accrédités.

Martin Langlais - Technicien

2015-02-16

5F09106

Le droit d'auteur du présent certificat appartient à Inst. St-Laurent Inc et doit être reproduit intégralement, à moins d'une autorisation écrite de Inst. St-Laurent Inc.

DISPERSION
Laboratoire • Laboratory

CLAS
NRC·CNRC
CLAS 2010-01

CERTIFICAT D'ÉTALONNAGE

108-86 Boulevard Des Entreprises, Boisbriand, Québec J7G 2T3
www.dispersion.ca 1.866.390.5066

Client :	Polytests	**No. du Certificat :**	**900-259410-141**
Adresse :	695 B rue Gaudette St-Jean-sur-Richelieu, QC J3B7S7	**Date d'étalonnage :**	03-11-2014

Technicien :
CB001,

Station d'étalonnage automatisée

Pierre Trépanier, Directeur laboratoire

DESCRIPTION DU SERVICE:

Description des masses :	ASTM E617	**Date d'approbation :**	03-11-2014
Classe de précision :	ASTM 1	**Date prochain étalonnage :**	03-11-2015
Densité :	7.95g/cm³	**Accrédtation CCN n. :**	668
Identification (si unique) :	(items multiples)	**Certification CLAS n. :**	2010-01

Condition d'essai :	Temp °C:	20.51	Pression kPa:	101.195	Humidité:	48.615

NOTES:

Pour l'étalonnage des masses, nous utilisons la procédure "Comparaison individuelle" PDL-09-MG-001 et la procédure "Détermination des incertitudes" PDL-09-MG-002. Le droit d'auteur du présent certificat appartient au laboratoire délivreur et doit être reproduit intégralement, à moins d'une autorisation écrite du laboratoire délivreur.

REMARQUES:

2014 · 11 · 05

DISPERSION
Laboratoire • Laboratory

CLAS
NRC·CNRC
CLAS 2010-01

CERTIFICAT D'ÉTALONNAGE

108-86 Boulevard Des Entreprises, Boisbriand, Québec J7G 2T3
www.dispersion.ca 1.866.390.5066

Client :	Polytests	**No. du Certificat :**	**900-259410-141**
Adresse :	695 B rue Gaudette	**Accrédtation CCN n. :**	668
	St-Jean-sur-Richelieu, QC	**Certification CLAS n. :**	2010-01
	J3B7S7	**Classe d'exactitude :**	ASTM 1
		Date d'étalonnage :	03-11-2014
Masse :	100 mg - 200 g	**Date du prochain étalonnage :**	03-11-2015

RÉSULTAT DE L'ÉTALONNAGE, MASSE CONVENTIONNELLE:

Valeur Nominale	No de série	No d'inventaire	Masse conventionnelle	Masse conventionnelle après ajustement	Tolérance ± (mg)	Incertitudes ± (mg)
100 mg	1000014200	EM-128	99.9996 mg		0.010 mg	0.002 mg
200 g	1000026013	EM-129	200.00023 g		0.50 mg	0.11 mg

S'applique seulement pour les masses qui ont été ajustées **Hors-tolérance pour la classe spécifiée**

2014-11-05

DISPERSION
Laboratoire • Laboratory

CLAS
NRC·CNRC
CLAS 2010-01

CERTIFICAT D'ÉTALONNAGE

108-86 Boulevard Des Entreprises, Boisbriand, Québec J7G 2T3
www.dispersion.ca 1.866.390.5066

Client :	Polytests	**No. du Certificat :**	**900-259410-141**
Adresse :	695 B rue Gaudette	**Accrédtation CCN n. :**	668
	St-Jean-sur-Richelieu, QC	**Certification CLAS n. :**	2010-01
	J3B7S7	**Classe d'exactitude :**	ASTM 1
		Date d'étalonnage :	03-11-2014
Masse :	100 mg - 200 g	**Date du prochain étalonnage :**	03-11-2015

RÉSULTAT DE L'ÉTALONNAGE DES POIDS, CORRECTIONS:

Valeur Nominale	No de série	No d'inventaire	Masse conventionnelle Correction	Masse conventionnelle Correction après ajustement	Tolérance ± (mg)	Incertitudes ± (mg)
100 mg	1000014200	EM-128	-0.0004 mg		0.010 mg	0.002 mg
200 g	1000026013	EM-129	0.23 mg		0.50 mg	0.11 mg

S'applique seulement pour les masses qui ont été ajustées **Hors-tolérance pour la classe spécifiée**

2014 - 11 - 05

DISPERSION
Laboratoire • Laboratory

CLAS
NRC·CNRC
CLAS 2010-01

CERTIFICAT D'ÉTALONNAGE

108-86 Boulevard Des Entreprises, Boisbriand, Québec J7G 2T3
www.dispersion.ca 1.866.390.5066

BALANCES UTILISÉES

Pour l'étalonnage manuel :

> 5 kg à 25 kg :	Mettler Toledo XP32003L, SNR 1123271214, max. 32100 g, d = 0.005 g
> 1 kg à 5 kg	Mettler Toledo PR5003, SNR 1115311634, max. 5100 g, d = 0.001 g
> 300 g à 2 kg :	Mettler Toledo XP2004S, SNR B131185222, max. 2100 g, d = 0.1 mg
> 100 g à 200 g :	Mettler Toledo AT201 SNR BA1115230146, max. 205 g, d = 0.01 mg
> 5 g à 100 g :	Mettler Toledo AX106 SNR 1127063924, max. 111 g, d = 1 µg
1 mg à 5 g :	Mettler UMX5, SNR 1121103055, max. 5.1 g, d = 0.1 µg

Pour l'étalonnage automatisé :

> 200 g à 1 kg :	Mettler Toledo AX1005 SNR 1127063210, max. 1109 g, d = 0.01 mg
> 5 g à 100 g :	Mettler Toledo AX106 SNR 1120143015, max. 111 g, d = 1 µg
1 mg à 5 g :	Mettler UMX5, SNR 1125140561, max. 5.1 g, d = 0.1 µg

Les balances sont vérifiées selon notre procédure de contrôle périodique PDL-11-MG-001.

INCERTITUDES:

Les incertitudes que nous retrouvons comprennent :

1. *L'incertitude associée à l'opération de pesage.*
2. *L'incertitude associée à la densité de l'air.*
3. *L'incertitude associée à l'étalon utilisé.*
4. *L'incertitude associée à la densité de la masse à être étalonnée.*

L'incertitude de l'opération de pesage comprend la reproductibilité à long terme.

Les incertitudes précisées dans ce rapport sont des incertitudes élargies représentant un niveau de confiance d'approximativement 95 %, obtenu en multipliant ensemble l'incertitude-type composée par un facteur de couverture de k = 2. Pour de plus amples renseignements, veuillez consulter la publication GUM (Guide pour l'expression de l'incertitude de mesure, édition de 1995).

TRAÇABILITÉ

Le Service d'évaluation de laboratoires d'étalonnage (CLAS) du Conseil national de recherches du Canada (CNRC) a évalué et a certifié des capacités d'étalonnage spécifiques de ce laboratoire et leur traçabilité à des étalons nationaux de mesure reconnus et au Système international d'unités (SI). Ce certificat d'étalonnage est émis conformément aux conditions de certification accordées par CLAS et aux conditions d'accréditation accordées par le Conseil canadien des normes (CCN). Le CLAS pas plus que le CCN ne peut garantir l'exactitude des étalonnages individuels effectués par des laboratoires accrédités.

2014 - 11 - 05

DISPERSION
Laboratoire • Laboratory

CLAS
NRC·CNRC
CLAS 2010-01

CERTIFICAT D'ÉTALONNAGE

108-86 Boulevard Des Entreprises, Boisbriand, Québec J7G 2T3
www.dispersion.ca 1.866.390.5066

RÉFÉRENCES UTILISÉES

Poids	No de série	Fabricant	Date d'étalonnage
20kg	69976	Troemner	18-03-2014
1kg - 1mg	MT-01	Mettler Toledo	04-09-2014
300g	96-0888-50-2	Denver Instrument Company	04-09-2014
2kg	96-0888-50-3	Denver Instrument Company	04-09-2014
2kg	129098	Mettler Toledo	04-09-2014
5kg	96-0888-50-3	Denver Instrument Company	04-09-2014
5kg	129099	Mettler Toledo	04-09-2014
10kg	129100	Mettler Toledo	14-08-2014

ÉTALONS CERTFIÉS PAR LE CNRC:

Poids	No de série	Fabricant	Date d'étalonnage
100g	95170	Mettler Toledo	19-08-2014
1kg	95171	Mettler Toledo	02-05-2014

RÉFÉRENCES DE LA STATION ROBOTISÉE:

Poids	No de série	Fabricant	Date d'étalonnage
1kg - 1mg	DK000A133	Laboratoire Dispersion	04-09-2014
1kg - 1mg	DK000A132	Laboratoire Dispersion	01-02-2013

2014 - 11 - 05

POLYCONTROLS

CLAS 2009-02

Conseil canadien des normes
Laboratoire accrédité
Portée d'accréditation 655

ISO/IEC 17025-2005

CERTIFICAT D'ÉTALONNAGE # 5138

Date d'étalonnage : 2015/09/18
Date d'émission du certificat : 2015/09/18

Services Polytests
695 B Gaudette street
St-Jean-sur-Richelieu, Québec, Canada
J3B 7S7

Étalonnage d'un
Débitmètre volumétrique American Meter Company DTM-200A S/N : 99A274209

CONFORMITÉ AU PROGRAMME DE QUALITÉ

Tous les étalonnages sont effectués conformément au manuel d'assurance qualité de Polycontrols et sont conformes à la norme ISO/IEC 17025 – 2005, à la norme ISO 9001 – 2008 ainsi qu'à tout autre exigences de qualité définies dans la description d'achat des clients.

TRAÇABILITÉ

La traçabilité des étalons de débit au National Institute of Standards and Technology, NIST, est maintenue par les laboratoires de Fluke Corporation de Phoenix, Arizona et est conforme aux normes ISO/IEC 17025, AINSI/NCSL Z540-1-1994, ISO-10012-1, MIL-STD 45662A.

Le Service d'évaluation des laboratoires d'étalonnage (CLAS) du Conseil national de recherches du Canada (CNRC) a évalué et certifié la capacité d'étalonnage du laboratoire et la traçabilité au Système international d'unités (SI) ou à des étalons acceptables selon le CLAS. Le présent certificat d'étalonnage est délivré conformément aux conditions de certification du CLAS et aux conditions d'accréditation du Conseil canadien des normes (CCN). Le CLAS et le CCN ne garantissent pas l'exactitude des étalonnages individuels effectués par les laboratoires accrédités.

APTITUDE EN MATIÈRE DE MESURE ET D'ÉTALONNAGE - CMC

Les références utilisées pour l'étalonnage de débit ont une incertitude de ±0.2% de la lecture pour les mesures entre 5 SCCM à 10 SLPM, ±0.3% de la lecture pour les mesures entre 10 SLPM à 30 SLPM, ±0.2% de la lecture pour les mesures entre 30 SLPM à 3000 SLPM, ±0.3% de la lecture pour les mesures supérieures à 3000 SLPM jusqu'à 6000 SLPM et ±0.5% pour les mesures inférieures à 5 SCCM jusqu'à concurrence de 1 SCCM, équivalent air ou azote. Les incertitudes exprimées sont élargies avec un facteur d'élargissement k = 2, et ce, pour un niveau de confiance d'environ 95 %, dans l'hypothèse d'une distribution normale. Le rapport d'incertitude des essais (RIE) de cet étalonnage respecte un ratio de 4:1 à moins d'indication contraire.

SOMMAIRE DES CONDITIONS DE L'INSTRUMENT EN TEST

Conditions initiales	En bon état
Travail Effectué	Étalonnage de l'instrument
Résultats	Lectures finales dans les tolérances
Remarques	Fréquence d'étalonnage aux 12 mois

B. Poirier
Métrologiste

Responsable du laboratoire

©2012 Polycontrols • Le présent document ne peut être reproduit, sinon en entier, que par l'approbation écrite des laboratoires d'étalonnage de la compagnie Polycontrols inc. 3650 boul. Matte (Local A-1), Brossard (Québec), Canada, J4Y 2Z2
Tel: (450) 444-3600 Fax: (450) 444-1088 www.polycontrols.com

2015-09-25

POLYCONTROLS

CLAS NRC·CNRC CLAS 2009-02

Conseil canadien des normes Laboratoire accrédité Portée d'accréditation 655

ISO/IEC 17025-2005 CERTIFICATION

Certificat d'étalonnage # 5138

Numéro de série:	99A274209	Station de mesure:	3
Date d'étalonnage:	2015/09/18	Procédure:	POS-CAL-005
Identification de l'instrument:	EM-130		

Instrument de mesure de référence utilisé pour l'étalonnage final

Description	Modèle	# Série	Traçabilité	Date dû
DHI molbloc (30 slpm)	3E4-VCR-V-Q	2359	1500173210	2015/11/12
DHI molbloc (120 slpm)	2E2-S	237	1500173211	2015/11/12
DHI molbox1	Molbox1	881	1500181338	2016/05/13
RTD Mist	M22	1871501	AC15021633-1871501	2016/03/27
Module 44.5 PSI avec Baro 163671	Module 30	160659	AC15041466-160659	2016/05/06

Spécifications finales de l'appareil

Gaz	Air
Température d'opération	
Pression à l'entrée	
Pression à la sortie	
Température de référence	
Pression de référence	
Étendue d'échelle	0-200 ACFH
Signaux Entrée/Sortie	-
Alimentation	
Tolérance ±1 %O.R.	

Condition d'étalonnage

Gaz	Air
Température ambiante	23 °C
Pression ambiante	1010 mbar
Orientation	Verticale
Élastomère	Viton
Valve	Viton

Lectures finales

Débit du test ACFH	Instrument en test ft3	Valeurs mesurées Pression PSIA	Température °C	Référence ft3	Référence calculée ft3	Erreur calculée ft3	Tolérance acceptable ft3	TUR
40.5223	13.535	14.687	23.73	13.367	13.494	0.041	0.135	2.98
70.6538	11.800	14.712	23.67	11.674	11.763	0.037	0.118	3.98
161.3162	26.875	14.818	23.61	26.851	26.856	0.019	0.269	>4

correction factor 0,9968

2015-09-25

Bernard Poirier
Métrologiste

Signature

POLYCONTROLS

CLAS 2009-02

Conseil canadien des normes
Laboratoire accrédité
Portée d'accréditation 655

ISO/IEC 17025-2005 CERTIFICATION

Certificat d'étalonnage # 5138

Numéro de série:	99A274209	Station de mesure:	3
Date d'étalonnage:	2015/09/18	Procédure:	POS-CAL-005
Identification de l'instrument:	EM-130		

Résultats finaux

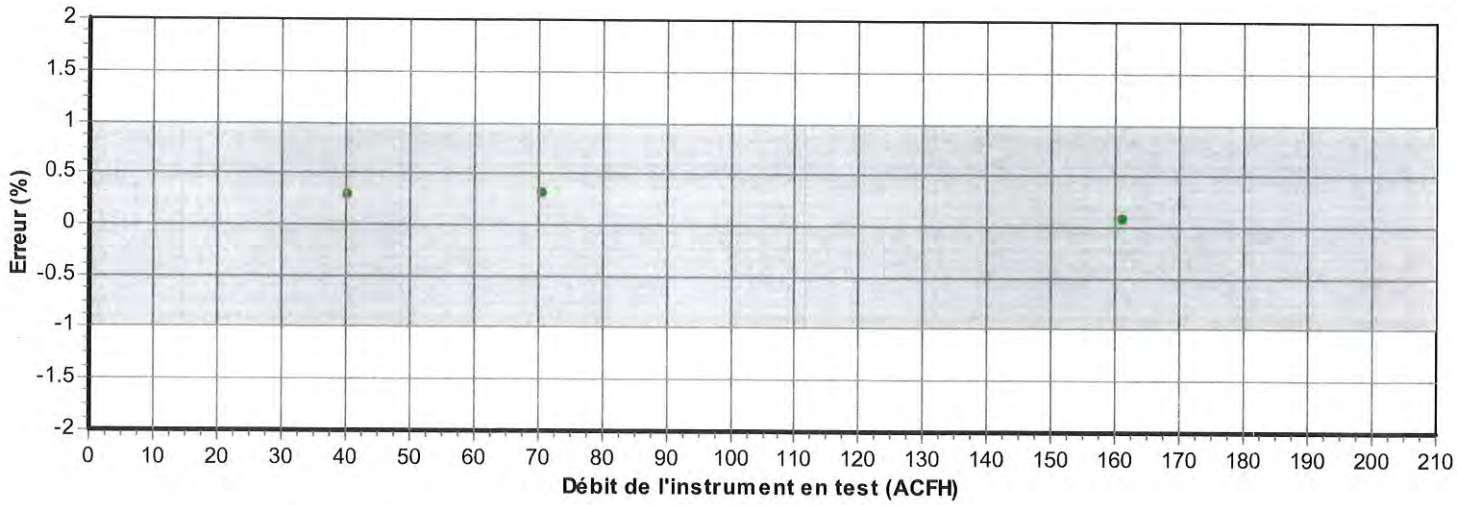

- La mesure (et son incertitude) se situe dans les tolérances
- La mesure (et son incertitude) se situe hors tolérance
- La mesure (et son incertitude) ne rencontre pas la marge de sécurité tel que spécifié dans le document G-8 de l'ILAC

2015-09-25

Bernard Poirier
Métrologiste

Signature

Instrumentation Saint•Laurent inc.
Accrédité ISO 17025

CLAS NRC·CNRC
CLAS 2010-02

SCC Accredited LAB
LAB Accrédité CCN
N°669

80 rue de la montagne
St-Joseph du lac
(Québec), J0N 1M0
Tél: (450) 473-6169
Fax: (450) 473-5207
Email: inst.st-laurent@videotron.ca

CERTIFICAT D'ÉTALONNAGE

No.Certificat: CE-EM-136 10/02/15

CLIENT	
Compagnie:	Services Polytests Inc
Adresse:	695 B rue Gaudette
	St-Jean-sur-Richelieu, Québec, J3B 7S7

SPÉCIFICATION DE CALIBRATION	
Procédure de service:	ISL-004
Précision requise:	+\-2°C +\-3%RH
Fréquence d'étalonnage: (jours)	365

SPÉCIFICATION DE L'INSTRUMENT			
Type d'instrument:	Hygromètre	**Type d'entrée:**	Temp/%RH
Manufacturier:	Fluke	**Type de sortie:**	Digitale
No. Model:	971	**Type de mesure:**	Temp/humidité
No. Série:	10610850	**Gamme:**	5-95%RH -20a60°C
Emplacement:	N.A.	**Conditions Enviro:**	Normale

SPÉCIFICATION DE L'ÉTALON			
Étalon Utilisé:	Vaisala Portable 1	**No. du certificat d'étalonnage:**	AC14061448-U4840010
No. Série:	U4840010/U4920031	**Dernière date d'étalonnage:**	2-Jul-14
Certificat fait par:	Alpha Controls	**Prochaine date d'étalonnage:**	2-Jul-15
Commentaire:			

RÉSULTAT D'ÉTALONNAGE

Entrée Source	Valeur Donnée	Valeur Actuelle	Erreur de Déviation	Valeur après Étalonnage	Incertitude Élargie	Commentaire
25.0 °C	25.0 °C	25.0 °C	0.0 °C	25.0 °C	1.0 °C	
40.0 °C	40.0 °C	40.2 °C	0.2 °C	40.2 °C	1.0 °C	
33.0 %RH	33.0 %RH	33.8 %RH	+0.8 %RH	33.8 %RH	3.0 %RH	
50.0 %RH	50.0 %RH	50.8 %RH	+0.8 %RH	50.8 %RH	3.0 %RH	
80.0 %RH	80.0 %RH	81.4 %RH	+1.4 %RH	81.4 %RH	3.0 %RH	

Conditions Environnementales: Température: 23 °C Humidité: 42 %RH

Type d'Étalonnage:

Instrumentation St-Laurent Inc. Certifie que l'instrument ci-haut, rencontre ou excède les spécifications établies par le fabriquant. Le système qualité de l'entreprise est conforme aux exigences de la norme ISO 17025 et les étalons utilisés pour effectuer l'étalonnage est retraçable au CNRC et/ou au NIST. Le degré d'incertitude est basé sur un niveau de confiance=95%, K=2.

DATE D'ÉTALONNAGE / ÉMISSION DU CERTIFICAT	
Date d'Étalonnage:	10 Février 2015
Date du prochain Étalonnage:	10 Février 2016
Date d'émission du certificat:	10 Février 2015

CONFORMITÉ D'ÉTALONNAGE	Avant	Après
Conforme:	X	X
Non Conforme:		

Le Service d'évaluation des laboratoires d'étalonnage (CLAS) du Conseil national de recherches du Canada (CNRC) a évalué et certifié la capacité d'étalonnage du laboratoire et la traçabilité au Système international d'unités (SI) ou à des étalons acceptables selon le CLAS. Le présent certificat d'étalonnage est délivré conformément aux conditions de certification du CLAS et aux conditions d'accréditation du Conseil canadien des normes (CCN). Numéro d'accréditation du CCN: # 669, Le CLAS et le CCN ne garantissent pas l'exactitude des étalonnages individuels effectués par les laboratoires accrédités.

Martin Langlais - Technicien

2015-02-16

Le droit d'auteur du présent certificat appartient à Inst. St-Laurent Inc et doit être reproduit intégralement, à moins d'une autorisation écrite de Inst. St-Laurent Inc.

CERTIFICATE OF NIST TRACEABLE CALIBRATION

Calibration Certificate No: 50431

LABORATORY ACCREDITATION BUREAU a division of A-S-B
ACCREDITED ISO/IEC 17025
Certificate # L2115-1 Calibration

Customer Information

Customer: Services Polytests, Inc.

Address : 695-B Gaudette
St-Jean-sur-richelieu
J3B 7S7

Customer PO #: 100365

Calibration Procedure Information

Procedure ID: GTP AIRVEL Revision #: 6 Revision Date: 1/6/2013

Calibration Standards Information

Graftel ID	Manufacturer	Model #	Description	CAL Due
10171	Furness	FC0332-2W	0 - .4" H2O	11/13/2015
10100	Graftel	n/a	Temperature	10/29/2016
60030	Paroscientific	760-100A	Pressure, 100 psia	5/7/2016
10155	HOBO	UX100-011	RH/Temp logger	11/18/2015
10187	Vaisala	PTB210	Barometric Pressure Gauge	6/16/2016

Sensor Information

Manufacturer: Omega
Model #: HHF143
Instrument ID#: EM153
Serial #: 1015949

Description: Anemometer
Rated Accuracy: ± See Attachment
Range: 40 to 7800 fpm

Method Used: Pitot Tube
Accuracy Specified By: Omega
Condition: Functional

Comments: Calibration Date: 08-04-2015

The instruments(s) listed on this certificate have been calibrated against standards traceable to the National Institue of Standards & Technology (NIST) or compared to nationally or internationally recognized consensus standards. The reported calibration uncertainty has a confidence level of 95% (k=2). A calibration uncertainty ratio of 4:1 was maintained unless required uncertainty is supported by analysis. Graftel, LLC. Quality Assurance System complies with applicable requirements of ISO/IEC-17025-2005, ANSI/NCSL Z540-I-1994 and ISO 9001: 2008. All results contained within this certificate relate only to item(s) calibrated. This certificate shall not be reproduced except in full and with the written consent of Graftel, LLC. Acceptance Criteria per Simple Acceptance Rule: Measurement Uncertainty is not applied to the measured value when in/out of tolerance statement is made.

Performed By: _____ Date: 8/4/2015

D. Stocks
Calibration Technician

GRAFTEL, LLC. 870 Cambridge Drive, Elk Grove Village, IL 60007 847.364.2600
www.graftel.com

17 Août 2015

ATTACHMENT TO CALIBRATION CERTIFICATE 50431
AS FOUND/AS LEFT DATA

Reading From Standard,	Lower Limit of Meter Reading,	Measured Reading From Meter,	Upper Limit of Meter Reading,	Error,	Measurement Uncertainty,	STATUS
Actual Air Velocity						
fpm	fpm	fpm	fpm	fpm	fpm	
662	654	660	670	-2	3.31	Pass
1600	1583	1603	1617	3	8.00	Pass
2562	2535	2569	2589	7	12.81	Pass
3449	3414	3450	3484	1	17.25	Pass
4231	4188	4239	4274	8	21.16	Pass
5144	5092	5150	5196	6	25.72	Pass
6074	6012	6075	6136	1	30.37	Pass
6678	6610	6644	6746	-34	33.39	Pass

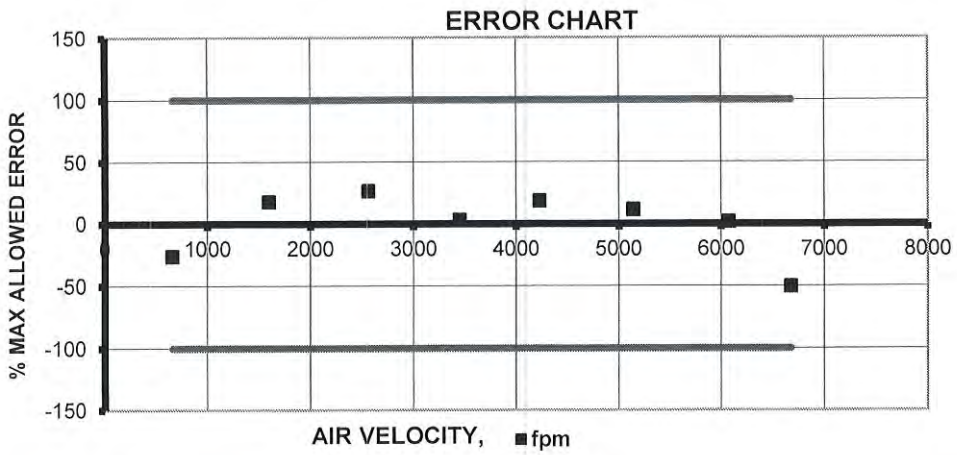

INSTRUMENT SPECIFICATIONS		
Test Fluid	Air	
Lower Range	40	fpm
Upper Range	7800	fpm
Rated Accuracy	1%Rding +1 fpm	
LABORATORY AMBIENT CONDITIONS		
Pressure	14.31	psia
Humidity	50.90	% RH
Temperature	74.56	F

Flow - Humidity - Temperature - Pressure - Design - Consulting - Engineering

NIST Traceable Calibration Data Sheet

Graftel, LLC. 870 Cambridge Drive, Elk Grove Village, IL 60007
P. 847-364-2600 F. 847-364-2899
www.graftel.com

17 août 2015

Instrumentation Saint•Laurent inc.
Accrédité ISO 17025

CLAS NRC·CNRC
CLAS 2010-02

SCC Accredited LAB
LAB Accrédité CCN
N°669

80 rue de la montagne
St-Joseph du lac
(Québec), J0N 1M0
Tél: (450) 473-6169
Fax: (450) 473-5207
Email: inst.st-laurent@videotron.ca

CERTIFICAT D'ÉTALONNAGE

No.Certificat: CE-EM-154 05/02/15

CLIENT	
Compagnie:	Services Polytests Inc
Adresse:	695 B rue Gaudette
	St-Jean-sur-Richelieu, Québec, J3B 7S7

SPÉCIFICATION DE CALIBRATION	
Procédure de service:	4IN9101
Précision requise:	+\- 2°C
Fréquence d'étalonnage: (jours)	365

SPÉCIFICATION DE L'INSTRUMENT			
Type d'instrument:	Enregistreur	**Type d'entrée:**	Temp
Manufacturier:	Keithley	**Type de sortie:**	Digitale
No. Model:	7700	**Type de mesure:**	Température
No. Série:	1306774	**Gamme:**	Divers
Emplacement:	EM-047	**Conditions Enviro:**	Normale

SPÉCIFICATION DE L'ÉTALON			
Étalon Utilisé:	Fluke 744	**No. du certificat d'étalonnage:**	AC14061448-7798010
No. Série:	7798010	**Dernière date d'étalonnage:**	26-Jun-14
Certificat fait par:	Alpha Controls	**Prochaine date d'étalonnage:**	26-Jun-15
Commentaire:			

RÉSULTAT D'ÉTALONNAGE

Entrée Source	Valeur Donnée	Valeur Actuelle	Erreur de Déviation	Valeur après Étalonnage	Incertitude Élargie	Commentaire
-17.000 mV	-17.000 mV	-17.001 mV	-0.001 mV	-17.001 mV	0.1 mV	Input#1
0.000 mV	0.000 mV	-0.005 mV	-0.005 mV	-0.005 mV	0.1 mV	Input#1
20.000 mV	20.000 mV	19.993 mV	-0.007 mV	19.993 mV	0.1 mV	Input#1
30.000 mV	30.000 mV	30.001 mV	0.001 mV	30.001 mV	0.1 mV	Input#2
Input#3 Non-Conforme						
100.0 °C	100.0 °C	99.8 °C	-0.2 °C	99.8 °C	1.0 °C	Input#4 TypeJ
100.0 °C	100.0 °C	100.2 °C	0.2 °C	100.2 °C	1.0 °C	Input#5TypeJ
100.0 °C	100.0 °C	100.2 °C	0.2 °C	100.2 °C	1.0 °C	Input#6TypeJ
100.0 Ohms	100.0 Ohms	100.0 Ohms	0.0 Ohms	100.0 Ohms	1.0 Ohms	Input#7
100.0 Ohms	100.0 Ohms	100.0 Ohms	0.0 Ohms	100.0 Ohms	1.0 Ohms	Input#8
100.0 Ohms	100.0 Ohms	99.9 Ohms	-0.1 Ohms	99.9 Ohms	1.0 Ohms	Input#9
100.0 Ohms	100.0 Ohms	99.8 Ohms	-0.2 Ohms	99.8 Ohms	1.0 Ohms	Input#10
100.0 °C	100.0 °C	100.0 °C	0.0 °C	100.0 °C	1.0 °C	Input#11TypeT
100.0 °C	100.0 °C	100.1 °C	0.1 °C	100.1 °C	1.0 °C	Input#12TypeT
100.0 °C	100.0 °C	100.0 °C	0.0 °C	100.0 °C	1.0 °C	Input#13 TypeJ
100.0 °C	100.0 °C	100.2 °C	0.2 °C	100.2 °C	1.0 °C	Input#14TypeJ
100.0 °C	100.0 °C	99.8 °C	-0.2 °C	99.8 °C	1.0 °C	Input#15 TypeJ
100.0 °C	100.0 °C	100.0 °C	0.0 °C	100.0 °C	1.0 °C	Input#16TypeJ
100.0 Ohms	100.0 Ohms	100.1 Ohms	0.1 Ohms	100.1 Ohms	1.0 Ohms	Input#17
100.0 Ohms	100.0 Ohms	100.1 Ohms	0.1 Ohms	100.1 Ohms	1.0 Ohms	Input#18
100.0 Ohms	100.0 Ohms	100.2 Ohms	0.2 Ohms	100.2 Ohms	1.0 Ohms	Input#19
100.0 Ohms	100.0 Ohms	99.9 Ohms	-0.1 Ohms	99.9 Ohms	1.0 Ohms	Input#20
12.000 mA	12.000 mA	12.003 mA	0.003 mA	12.003 mA	1.00 mA	Input#21
12.000 mA	12.000 mA	12.003 mA	0.003 mA	12.003 mA	1.00 mA	Input#22

Conditions Environnementales: Température: 20 °C Humidité: 24 %RH

5F09101

Le droit d'auteur du présent certificat appartient à Inst. St-Laurent Inc et doit être reproduit intégralement, à moins d'une autorisation écrite de Inst. St-Laurent Inc.

2015-02-16

Instrumentation Saint•Laurent inc.
Accrédité ISO 17025

CLAS NRC·CNRC
CLAS 2010-02

SCC Accredited LAB
LAB Accrédité CCN
N°669

80 rue de la montagne
St-Joseph du lac
(Québec), J0N 1M0
Tél: (450) 473-6169
Fax: (450) 473-5207
Email: inst.st-laurent@videotron.ca

CERTIFICAT D'ÉTALONNAGE

No.Certificat: CE-EM-154 05/02/15

CLIENT	
Compagnie:	Services Polytests Inc
Adresse:	695 B rue Gaudette
	St-Jean-sur-Richelieu, Québec, J3B 7S7

SPÉCIFICATION DE CALIBRATION	
Procédure de service:	4IN9101
Précision requise:	+\- 2°C
Fréquence d'étalonnage: (jours)	365

SPÉCIFICATION DE L'INSTRUMENT			
Type d'instrument:	Enregistreur	**Type d'entrée:**	Temp
Manufacturier:	Keithley	**Type de sortie:**	Digitale
No. Model:	7700	**Type de mesure:**	Température
No. Série:	1306774	**Gamme:**	Divers
Emplacement:	EM-047	**Conditions Enviro:**	Normale

Type d'Étalonnage:

Instrumentation St-Laurent Inc. Certifie que l'instrument ci-haut, rencontre ou excède les spécifications établies par le fabriquant. Le système qualité de l'entreprise est conforme aux exigences de la norme ISO 17025 et les étalons utilisés pour effectuer l'étalonnage est retraçable au CNRC et/ou au NIST. Le degré d'incertitude est basé sur un niveau de confiance=95%, K=2.

DATE D'ÉTALONNAGE / ÉMISSION DU CERTIFICAT	
Date d'Étalonnage:	5 Février 2015
Date du prochain Étalonnage:	5 Février 2016
Date d'émission du certificat:	5 Février 2015

CONFORMITÉ D'ÉTALONNAGE	Avant	Après
Conforme:	X	X
Non Conforme:		

Le Service d'évaluation des laboratoires d'étalonnage (CLAS) du Conseil national de recherches du Canada (CNRC) a évalué et certifié la capacité d'étalonnage du laboratoire et la traçabilité au Système international d'unités (SI) ou à des étalons acceptables selon le CLAS. Le présent certificat d'étalonnage est délivré conformément aux conditions de certification du CLAS et aux conditions d'accréditation du Conseil canadien des normes (CCN). Numéro d'accréditation du CCN: # 669. Le CLAS et le CCN ne garantissent pas l'exactitude des étalonnages individuels effectués par les laboratoires accrédités.

Martin Langlais - Technicien

5F09101

Le droit d'auteur du présent certificat appartient à Inst. St-Laurent Inc et doit être reproduit intégralement, à moins d'une autorisation écrite de Inst. St-Laurent Inc.

Ulrich Métrologie inc.
Ulrich Metrology Inc.
9912, Côte-de-Liesse
Montréal (Québec) H8T 1A1

Tél. (514) 631-6653
Fax (514) 631-6122
info@ulrich.ca
www.ulrich.ca

CLAS NRC-CNRC CLAS 1999-01

ACCREDITATION ISO 17025
SCC Scope Number 220

CALIBRATION CERTIFICATE

Certificate no.:	472805	**Calibration date:**	May 19, 2015
Identification:	EM-176	**Certificate issued:**	May 21, 2015
Description:	CALIPER, DIGITAL, 6 IN	**Interval:**	12 months
Size:	6 IN	**Due date:**	May 19, 2016
Manufacturer:	MITUTOYO	**Procedure no.:**	CP-28 rev. 2
Model no.:	500-171-20	**Procedure date:**	2010-07-08
Serial no.:	12610701	**Environment:**	CLAS Type 1 Laboratory
		Temperature:	20 ± 1°C
		Humidity:	35 - 55% RH
		Metrologist:	MOH

Property of: SERVICES POLYTESTS INC
695-B GAUDETTE
ST-JEAN-SUR-RICHELIEU, QC J3B 7S7

Approved by: David Llorens, Quality Manager

This calibration certificate is issued in accordance with the applicable requirements of ISO/IEC 17025 and Ulrich Metrology's quality manual QM-09 Revision 9. Measurement results provided are traceable to either the National Research Council Canada (NRC), the National Institute of Standards and Technology (NIST), a national laboratory of another country signatory to the CIPM Mutual Recognition Arrangement (MRA), or a calibration laboratory accredited by an accrediting body with which Canada has an equivalence agreement.

CALIBRATION STANDARDS

Identification	Description	Cal. date	Due date
27071932	Gauge Blocks, In, 81 Pcs	2015-01-09	2017-01-31
76072	Caliper Checker, Mitutoyo 515-560-um	2015-01-07	2016-01-31
SP-3	Granite Surface Plate	2013-10-28	2015-10-31

MEASUREMENT UNCERTAINTY

Outside: ± 0.00030 in. Inside: ± 0.00030 in. Depth: ± 0.00030 in.
The uncertainties are expanded using a coverage factor K=2 for a level of confidence of approximately 95%, assuming a normal distribution.

INSTRUMENT CONDITION

Received (As Found): Out of Specifications **Returned (As Left):** Within Specifications

CALIBRATION DATA

Attribute	Minimum	Maximum	As Found	As Left	Units
Outside 1 in	-1	1	-2	0	.001 in
Outside 2 in	-1	1	-2	0	.001 in
Outside 4 in	-1	1	-2	0	.001 in
Outside 6 in	-1	1	-2	0	.001 in
Inside 1 in	-1	1	2	0	.001 in
Inside 6 in	-1	1	2	0	.001 in
Depth 1 in	-1	1	0	0	.001 in
Depth 6 in	-1	1	0	0	.001 in

The Calibration Laboratory Assessment Service (CLAS) of the National Research Council of Canada (NRC) has assessed and certified specific calibration capabilities of this laboratory and traceability to the International System of Units (SI) or to standards acceptable to the CLAS program. This certificate of calibration is issued in accordance with the conditions of certification granted by CLAS and the conditions of accreditation granted by the Standards Council of Canada (SCC). Neither CLAS nor SCC guarantee the accuracy of individual calibrations by accredited laboratories.

© Copyright of this Calibration Certificate CE-08-03 is owned by Ulrich Metrology Inc. and may not be reproduced other than in full except with the prior approval of Ulrich Metrology Inc.

230313A

30 MAI 2015

Ulrich Métrologie inc.
Ulrich Metrology Inc.
9912, Côte-de-Liesse
Montréal (Québec) H8T 1A1

Tél. (514) 631-6653
Fax (514) 631-6122
info@ulrich.ca
www.ulrich.ca

ACCREDITATION ISO 17025
SCC Scope Number 220

Certificate no.:	472805	**Calibration date:**	May 19, 2015
Identification:	EM-176	**Certificate issued:**	May 21, 2015

CALIBRATION DATA

Attribute	Minimum	Maximum	As Found	As Left	Units

■ : Adjusted

Notes:

Gauge was received out of tolerance.
Gauge was adjusted.

The Calibration Laboratory Assessment Service (CLAS) of the National Research Council of Canada (NRC) has assessed and certified specific calibration capabilities of this laboratory and traceability to the International System of Units (SI) or to standards acceptable to the CLAS program. This certificate of calibration is issued in accordance with the conditions of certification granted by CLAS and the conditions of accreditation granted by the Standards Council of Canada (SCC). Neither CLAS nor SCC guarantee the accuracy of individual calibrations by accredited laboratories.

© Copyright of this Calibration Certificate CE-08-03 is owned by Ulrich Metrology Inc. and may not be reproduced other than in full except with the prior approval of Ulrich Metrology Inc.

230313A

POLYCONTROLS

CLAS NRC·CNRC CLAS 2009-02

Conseil canadien des normes Laboratoire accrédité Portée d'accréditation 655

ISO/IEC 17025-2005 CERTIFICATION

CERTIFICAT D'ÉTALONNAGE # 5144

Date d'étalonnage : 2015/09/21
Date d'émission du certificat : 2015/09/22

Services Polytests
695 B Gaudette street
St-Jean-sur-Richelieu, Québec, Canada
J3B 7S7

Étalonnage d'un
Shinigawa DCDa-2c S/N : 23544

CONFORMITÉ AU PROGRAMME DE QUALITÉ

Tous les étalonnages sont effectués conformément au manuel d'assurance qualité de Polycontrols et sont conformes à la norme ISO/IEC 17025 – 2005, à la norme ISO 9001 – 2008 ainsi qu'à tout autre exigences de qualité définies dans la description d'achat des clients.

TRAÇABILITÉ

La traçabilité des étalons de débit au National Institute of Standards and Technology, NIST, est maintenue par les laboratoires de Fluke Corporation de Phoenix, Arizona et est conforme aux normes ISO/IEC 17025, AINSI/NCSL Z540-1-1994, ISO-10012-1, MIL-STD 45662A.

Le Service d'évaluation des laboratoires d'étalonnage (CLAS) du Conseil national de recherches du Canada (CNRC) a évalué et certifié la capacité d'étalonnage du laboratoire et la traçabilité au Système international d'unités (SI) ou à des étalons acceptables selon le CLAS. Le présent certificat d'étalonnage est délivré conformément aux conditions de certification du CLAS et aux conditions d'accréditation du Conseil canadien des normes (CCN). Le CLAS et le CCN ne garantissent pas l'exactitude des étalonnages individuels effectués par les laboratoires accrédités.

APTITUDE EN MATIÈRE DE MESURE ET D'ÉTALONNAGE - CMC

Les références utilisées pour l'étalonnage de débit ont une incertitude de ±0.2% de la lecture pour les mesures entre 5 SCCM à 10 SLPM, ±0.3% de la lecture pour les mesures entre 10 SLPM à 30 SLPM, ±0.2% de la lecture pour les mesures entre 30 SLPM à 3000 SLPM, ±0.3% de la lecture pour les mesures supérieures à 3000 SLPM jusqu'à 6000 SLPM et ±0.5% pour les mesures inférieures à 5 SCCM jusqu'à concurrence de 1 SCCM, équivalent air ou azote. Les incertitudes exprimées sont élargies avec un facteur d'élargissement k = 2, et ce, pour un niveau de confiance d'environ 95 %, dans l'hypothèse d'une distribution normale. Le rapport d'incertitude des essais (RIE) de cet étalonnage respecte un ratio de 4:1 à moins d'indication contraire.

SOMMAIRE DES CONDITIONS DE L'INSTRUMENT EN TEST

Conditions initiales	En bon état
Travail Effectué	Étalonnage de l'instrument
Résultats	Lectures finales dans les tolérances
Remarques	Tolérance placée à 2% OR à la demande du client

Métrologiste

Responsable du laboratoire

©2012 Polycontrols • Le présent document ne peut être reproduit, sinon en entier, que par l'approbation écrite des laboratoires d'étalonnage de la compagnie Polycontrols inc. 3650 boul. Matte (Local A-1), Brossard (Québec), Canada, J4Y 2Z2
Tel: (450) 444-3600 Fax: (450) 444-1088 www.polycontrols.com

2015-09-25

POLYCONTROLS

CLAS NRC·CNRC CLAS 2009-02

Conseil canadien des normes Laboratoire accrédité Portée d'accréditation 655

ISO/IEC 17025-2005 CERTIFICATION

Certificat d'étalonnage # 5144

Numéro de série:	23544	Station de mesure:	3
Date d'étalonnage:	2015/09/21	Procédure:	POS-CAL-005
Identification de l'instrument:	EM-178		

Instrument de mesure de référence utilisé pour l'étalonnage final

Description	Modèle	# Série	Traçabilité	Date dû
DHI molbloc (30 slpm)	3E4-VCR-V-Q	2359	1500173210	2015/11/12
DHI molbloc (5 slpm)	5E3-VCR-V-Q	2473	1500177779	2016/03/03
DHI molbloc (10 slpm)	1E4-VCR-V-Q	2969	1500180895	2016/05/08
DHI molbox1	Molbox1	881	1500181338	2016/05/13
RTD Mist	M22	1478002	AC15041413-1478002	2016/04/24
Module 44.5 PSI avec Baro 163671	Module 30	160659	AC15041466-160659	2016/05/06

Spécifications finales de l'appareil

Gaz	Air
Température d'opération	70 °F
Pression à l'entrée	
Pression à la sortie	14.7 PSIA
Température de référence	
Pression de référence	
Étendue d'échelle	10-2000 ALH
Signaux Entrée/Sortie	-
Alimentation	
Tolérance	±2 %O.R.

Condition d'étalonnage

Gaz	Air
Température ambiante	22 °C
Pression ambiante	1022 mbar
Orientation	Horizontale
Élastomère	Viton
Valve	

Lectures finales

Débit du test ALH	Instrument en test L	Valeurs mesurées Pression PSIA	Température °C	Référence L	Référence calculée L	Erreur calculée L	Tolérance acceptable L	TUR
238.92417	39.9800	14.8361	23.21	39.8618	39.7672	0.2128	0.7953	>4
358.99658	59.9500	14.8388	23.15	60.0432	59.8780	0.0720	1.1976	>4
478.19782	79.9100	14.8426	23.12	79.8495	79.6030	0.3070	1.5921	>4
598.14179	99.9900	14.8459	23.13	99.6913	99.3646	0.6254	1.9873	>4
1194.42507	200.6300	14.8537	23.14	199.5841	198.8317	1.7983	3.9766	>4

correction factor 0,99614

Bernard Poirier
Métrologiste

B Poirier
Signature

2015-09-25

POLYCONTROLS

CLAS NRC·CNRC CLAS 2009-02

Conseil canadien des normes
Laboratoire accrédité
Portée d'accréditation 655

ISO/IEC 17025-2005 CERTIFICATION

Certificat d'étalonnage # 5144

Numéro de série:	23544	Station de mesure:	3
Date d'étalonnage:	2015/09/21	Procédure:	POS-CAL-005
Identification de l'instrument:	EM-178		

Résultats finaux

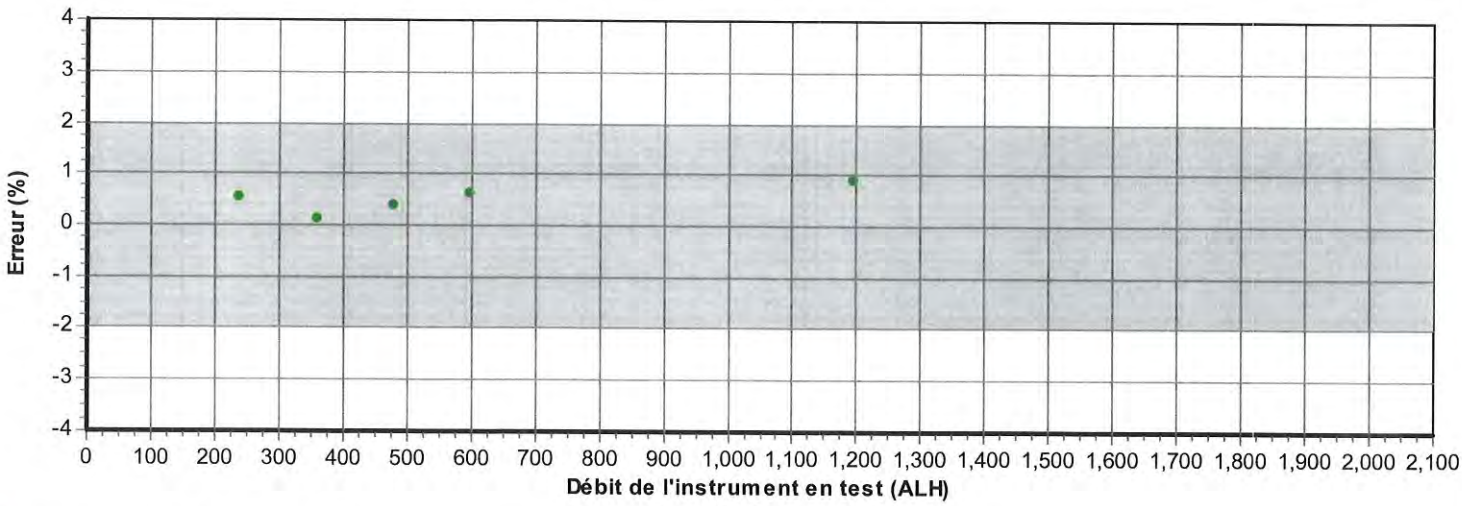

- La mesure (et son incertitude) se situe dans les tolérances
- La mesure (et son incertitude) se situe hors tolérance
- La mesure (et son incertitude) ne rencontre pas la marge de sécurité tel que spécifié dans le document G-8 de l'ILAC

2015-09-25

Bernard Poirier
Métrologiste

Signature

POLYCONTROLS

CLAS NRC·CNRC CLAS 2009-02

Conseil canadien des normes Laboratoire accrédité Portée d'accréditation 655

ISO/IEC 17025-2005 CERTIFICATION

CERTIFICAT D'ÉTALONNAGE # 5145

Date d'étalonnage : 2015/09/21
Date d'émission du certificat : 2015/09/22

Services Polytests
695 B Gaudette street
St-Jean-sur-Richelieu, Québec, Canada
J3B 7S7

Étalonnage d'un
Shinigawa DCDa-2c S/N : 23543

CONFORMITÉ AU PROGRAMME DE QUALITÉ

Tous les étalonnages sont effectués conformément au manuel d'assurance qualité de Polycontrols et sont conformes à la norme ISO/IEC 17025 – 2005, à la norme ISO 9001 – 2008 ainsi qu'à tout autre exigences de qualité définies dans la description d'achat des clients.

TRAÇABILITÉ

La traçabilité des étalons de débit au National Institute of Standards and Technology, NIST, est maintenue par les laboratoires de Fluke Corporation de Phoenix, Arizona et est conforme aux normes ISO/IEC 17025, AINSI/NCSL Z540-1-1994, ISO-10012-1, MIL-STD 45662A.

Le Service d'évaluation des laboratoires d'étalonnage (CLAS) du Conseil national de recherches du Canada (CNRC) a évalué et certifié la capacité d'étalonnage du laboratoire et la traçabilité au Système international d'unités (SI) ou à des étalons acceptables selon le CLAS. Le présent certificat d'étalonnage est délivré conformément aux conditions de certification du CLAS et aux conditions d'accréditation du Conseil canadien des normes (CCN). Le CLAS et le CCN ne garantissent pas l'exactitude des étalonnages individuels effectués par les laboratoires accrédités.

APTITUDE EN MATIÈRE DE MESURE ET D'ÉTALONNAGE - CMC

Les références utilisées pour l'étalonnage de débit ont une incertitude de ±0.2% de la lecture pour les mesures entre 5 SCCM à 10 SLPM, ±0.3% de la lecture pour les mesures entre 10 SLPM à 30 SLPM, ±0.2% de la lecture pour les mesures entre 30 SLPM à 3000 SLPM, ±0.3% de la lecture pour les mesures supérieures à 3000 SLPM jusqu'à 6000 SLPM et ±0.5% pour les mesures inférieures à 5 SCCM jusqu'à concurrence de 1 SCCM, équivalent air ou azote. Les incertitudes exprimées sont élargies avec un facteur d'élargissement k = 2, et ce, pour un niveau de confiance d'environ 95 %, dans l'hypothèse d'une distribution normale. Le rapport d'incertitude des essais (RIE) de cet étalonnage respecte un ratio de 4:1 à moins d'indication contraire.

SOMMAIRE DES CONDITIONS DE L'INSTRUMENT EN TEST

Conditions initiales	En bon état
Travail Effectué	Étalonnage de l'instrument
Résultats	Lectures finales dans les tolérances
Remarques	Tolérance placée à 2% OR à la demande du client

Métrologiste

Responsable du laboratoire

©2012 Polycontrols • Le présent document ne peut être reproduit, sinon en entier, que par l'approbation écrite des laboratoires d'étalonnage de la compagnie Polycontrols inc. 3650 boul. Matte (Local A-1), Brossard (Québec), Canada, J4Y 2Z2
Tel: (450) 444-3600 Fax: (450) 444-1088 www.polycontrols.com

2015-09-25

POLYCONTROLS

CLAS NRC·CNRC CLAS 2009-02

Conseil canadien des normes
Laboratoire accrédité
Portée d'accréditation 655

ISO/IEC 17025-2005 CERTIFICATION

Certificat d'étalonnage # 5145

Numéro de série:	23543	Station de mesure:	3
Date d'étalonnage:	2015/09/21	Procédure:	POS-CAL-005
Identification de l'instrument:	EM-179		

Instrument de mesure de référence utilisé pour l'étalonnage final

Description	Modèle	# Série	Traçabilité	Date dû
DHI molbloc (30 slpm)	3E4-VCR-V-Q	2359	1500173210	2015/11/12
DHI molbloc (5 slpm)	5E3-VCR-V-Q	2473	1500177779	2016/03/03
DHI molbloc (10 slpm)	1E4-VCR-V-Q	2969	1500180895	2016/05/08
DHI molbox1	Molbox1	881	1500181338	2016/05/13
RTD Mist	M22	1478002	AC15041413-1478002	2016/04/24
Module 44.5 PSI avec Baro 163671	Module 30	160659	AC15041466-160659	2016/05/06

Spécifications finales de l'appareil		Condition d'étalonnage	
Gaz	Air	Gaz	Air
Température d'opération	70 °F	Température ambiante	22 °C
Pression à l'entrée		Pression ambiante	1022 mbar
Pression à la sortie	14.7 PSIA	Orientation	Horizontale
Température de référence		Élastomère	Viton
Pression de référence		Valve	
Étendue d'échelle	10-2000 ALH		
Signaux Entrée/Sortie	-		
Alimentation			
Tolérance ±2 %O.R.			

Lectures finales

Débit du test ALH	Instrument en test L	Valeurs mesurées Pression PSIA	Température °C	Référence L	Référence calculée L	Erreur calculée L	Tolérance acceptable L	TUR
240.2115	40.5300	14.8534	23.08	40.2907	40.1306	0.3994	0.8026	>4
357.9294	60.2300	14.8526	23.10	59.8336	59.6039	0.6261	1.1921	>4
482.1559	81.1350	14.8519	23.09	80.5968	80.2884	0.8466	1.6058	>4
597.9776	100.5650	14.8533	23.10	99.9645	99.5776	0.9874	1.9916	>4
1201.7844	202.2300	14.8569	23.10	200.8896	200.0572	2.1728	4.0011	>4

correction factor 0,99005 2015-09-25

Bernard Poirier
Métrologiste

Signature

POLYCONTROLS

CLAS 2009-02

Conseil canadien des normes
Laboratoire accrédité
Portée d'accréditation 655

ISO/IEC 17025-2005 CERTIFICATION

Certificat d'étalonnage # 5145

Numéro de série:	23543	Station de mesure:	3
Date d'étalonnage:	2015/09/21	Procédure:	POS-CAL-005
Identification de l'instrument:	EM-179		

Résultats finaux

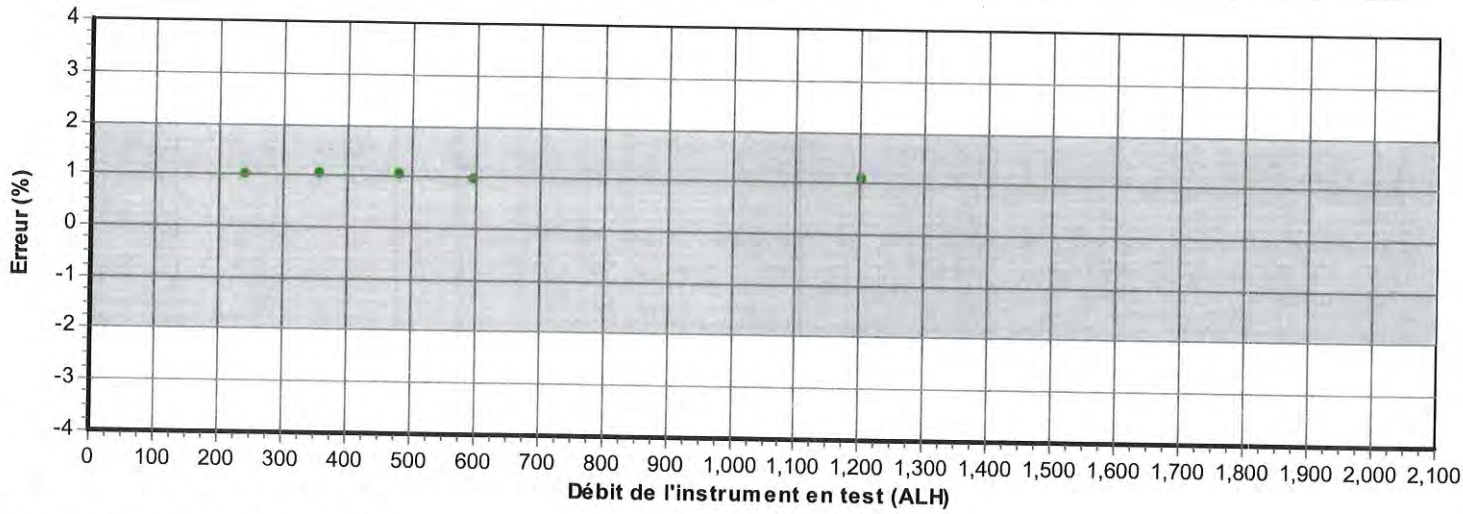

- La mesure (et son incertitude) se situe dans les tolérances
- La mesure (et son incertitude) se situe hors tolérance
- La mesure (et son incertitude) ne rencontre pas la marge de sécurité tel que spécifié dans le document G-8 de l'ILAC

2015-09-25

Bernard Poirier
Métrologiste

Signature

EM-183

Airgas.

Airgas USA, LLC
325 McCausland Court
Cheshire, CT 06410
(203) 250-6820
(203) 272-1584 (FAX)

CERTIFICATE OF ANALYSIS

Grade of Product: CERTIFIED STANDARD-SPEC

Part Number:	X04NI79C15A2VF3	Reference Number:	37-400238139-1
Cylinder Number:	SG9140147	Cylinder Volume:	151.0 CF
Laboratory:	ANE - Cheshire (SAP) - CT	Cylinder Pressure:	2015 PSIG
Analysis Date:	Aug 16, 2013	Valve Outlet:	590
Lot Number:	37-400238139-1		

Product composition verified by direct comparison to calibration standards traceable to N.I.S.T. weights and/or N.I.S.T. Gas Mixture reference materials.

ANALYTICAL RESULTS

Component	Requested Concentration	Actual Concentration (Mole %)	Analytical Uncertainty
CARBON MONOXIDE	1.000 %	1.031 %	+/- 2%
CARBON DIOXIDE	10.00 %	9.968 %	+/- 2%
OXYGEN	10.00 %	9.995 %	+/- 2%
NITROGEN	Balance		

Notes:

Approved for Release

Airgas

Airgas USA, LLC
325 McCausland Court
Cheshire, CT 06410
(203) 250-6820
(203) 272-1584 (FAX)

CERTIFICATE OF ANALYSIS

Grade of Product: CERTIFIED STANDARD-SPEC

Part Number:	X04NI77C15A0004	Reference Number:	37-400429255-1
Cylinder Number:	CC46789	Cylinder Volume:	144.0 CF
Laboratory:	ANE - Cheshire (SAP) - CT	Cylinder Pressure:	1862 PSIG
Analysis Date:	Sep 29, 2014	Valve Outlet:	350
Lot Number:	37-400429255-1		

Product composition verified by direct comparison to calibration standards traceable to N.I.S.T. weights and/or N.I.S.T. Gas Mixture reference materials.

ANALYTICAL RESULTS

Component	Requested Concentration	Actual Concentration (Mole %)	Analytical Uncertainty
OXYGEN	2.000 %	1.989 %	+/- 2%
CARBON MONOXIDE	3.000 %	2.971 %	+/- 2%
CARBON DIOXIDE	18.00 %	17.87 %	+/- 2%
NITROGEN	Balance		

Approved for Release

POLYTESTS TESTING THROUGH YOUR REALITY Posttest dry gas meter calibration data		Date : 2016-01-14	Barometric pressure: 101	Tech/Eng. M.M.
Manufacturer. : Woodstock Soapstone Model : 211	Calibration factor 0.99614 DGM 1 : EM-178	Calibration factor 0.99005 DGM 2 : EM-179	Calibration factor 1.0000 DGM 3 : EM-070	Calibration factor 0.9968 Standardized DGM : EM-130

Standard meter							Dry gas meter #1					
Trail #	Press drop	Final ft3	Initial ft3	Change ft3	Temp F	STD ft3	Final Liter	Initial Liter	Change ft3	Temp F	STD ft3	Cal Factor
1	0	8830,4	8829,4	1,000	73	0,987	349634,320	349605,090	1,032	79,16	1,0109	1,0237
2	0	8831,4	8830,4	1,000	73	0,987	349663,390	349634,320	1,027	79,16	1,0053	1,0181
3	0	8832,4	8831,4	1,000	73,9	0,986	349692,510	349663,390	1,028	78,98	1,0074	1,0219
Average calibration factor : 1.0213												

Previous cal factor	minus	Average cal factor	Divided by	Previous cal. factor	Multiplied * 100	Equals	Deviation percent Max5%
0.99614	-	1.0213	/	0.99614	*100	=	2.53 %

Standard meter							Dry gas meter #2					
Trail #	Press drop	Final ft3	Initial ft3	Change ft3	Temp F	STD ft3	Final Liter	Initial Liter	Change ft3	Temp F	STD ft3	Cal Factor
1	0	8830,4	8829,4	1,000	73	0,987	306216,41	306186,98	1,039	79,88	1,016	1,0294
2	0	8831,4	8830,4	1,000	73	0,987	306245,68	306216,41	1,034	79,88	1,011	1,0238
3	0	8832,4	8831,4	1,000	73,9	0,986	306275,02	306245,68	1,036	80,06	1,013	1,0276
Average calibration factor : 1.0269												

Previous cal factor	minus	Average cal factor	Divided by	Previous cal. factor	Multiplied * 100	Equals	Deviation percent Max5%
0.99005	-	1.0269	/	0.99005	*100	=	3.72 %

POLYTESTS TESTING THROUGH YOUR REALITY Posttest dry gas meter calibration data		Date : 2016-01-14	Barometric pressure: 101	Tech/Eng. M.M.
Manufacturer. : Woodstock Soapstone Model : 211	Calibration factor 0.99614 DGM 1 : EM-178	Calibration factor 0.99005 DGM 2 : EM-179	Calibration factor 1.0000 DGM 3 : EM-070	Calibration factor 0.9968 Standardized DGM : EM-130

Standard meter							Dry gas meter #3					
Trail #	Press drop	Final ft3	Initial ft3	Change ft3	Temp F	STD ft3	Final Liter	Initial Liter	Change ft3	Temp F	STD ft3	Cal Factor
1	0	8830,4	8829,4	1,000	73	0,987	966	965,04	0,960	78,8	0,941	0,9527
2	0	8831,4	8830,4	1,000	73	0,987	967,12	966	1,120	78,8	1,098	1,1115
3	0	8832,4	8831,4	1,000	73,9	0,986	968,11	967,12	0,990	78,98	0,970	0,9838
Average calibration factor : 1.016												

Previous cal factor	minus	Average cal factor	Divided by	Previous cal. factor	Multiplied * 100	Equals	Deviation percent Max5%
1.0000	-	1.016	/	1.0000	*100	=	1.6 %

APPENDIX 4: Unit pre burn

Model 211 Catalyst Aging□Polytests

Hours	Minutes	Weight	Post-cat
0,0	0	4,4	952,5
0,5	30	14,8	1480,3
1,0	60	5,4	1084,2
1,5	90	4,1	874,6
2,0	120	2,8	818,2
2,5	150	2,0	738,0
3,0	180	21,6	976,7
3,5	210	18,8	1280,0
4,0	240	15,7	1372,4
4,5	270	11,9	976,6
5,0	300	9,0	1265,2
5,5	330	7,3	863,7
6,0	360	6,6	590,2
6,5	390	6,2	480,6
7,0	420	5,9	415,4
7,5	450	5,0	562,1
8,0	480	10,1	873,8
8,5	510	6,6	887,8
9,0	540	4,1	815,3
9,5	570	2,8	741,4
10,0	600	7,1	741,7
10,5	630	7,2	861,6
11,0	660	5,7	1014,4
11,5	690	4,5	807,8
12,0	720	3,8	633,1
12,5	750	6,1	617,6
13,0	780	4,1	745,3
13,5	810	11,3	1416,6
14,0	840	4,7	1267,5
14,5	870	2,4	927,6
15,0	900	1,3	806,7
15,5	930	0,5	732,5
16,0	960	28,8	637,4
16,5	990	27,6	770,2
17,0	1020	25,5	1052,6
17,5	1050	22,1	1312,1
18,0	1080	17,6	1039,2
18,5	1110	13,8	1044,0
19,0	1140	11,3	828,5
19,5	1170	9,2	792,3
20,0	1200	7,8	946,3
20,5	1230	6,9	682,8
21,0	1260	6,4	531,7
21,5	1290	6,1	477,0
22,0	1320	5,7	457,1
22,5	1350	5,3	438,4
23,0	1380	5,0	434,5

23,5	1410	4,7	424,3
24,0	1440	4,3	417,2
24,5	1470	4,0	424,7
25,0	1500	3,7	429,7
25,5	1530	3,4	453,3
26,0	1560	3,1	444,2
26,5	1590	2,7	459,1
27,0	1620	2,5	458,2
27,5	1650	2,2	477,4
28,0	1680	1,9	444,1
28,5	1710	1,7	440,3
29,0	1740	1,5	437,9
29,5	1770	1,2	435,1
30,0	1800	1,0	431,0
30,5	1830	0,8	300,9
31,0	1860	0,6	264,5
31,5	1890	0,5	236,2
32,0	1920	0,4	221,4
32,5	1950	0,3	206,6
33,0	1980	0,3	195,6
33,5	2010	9,5	1087,7
34,0	2040	5,2	883,2
34,5	2070	2,2	856,6
35,0	2100	1,0	646,0
35,5	2130	1,4	999,1
36,0	2160	2,3	1077,0
36,5	2190	8,3	1541,7
37,0	2220	2,5	1216,7
37,5	2250	18,9	868,9
38,0	2280	16,5	1088,8
38,5	2310	14,5	1090,7
39,0	2340	12,1	1243,8
39,5	2370	8,0	1157,5
40,0	2400	5,6	902,1
40,5	2430	5,0	677,9
41,0	2460	4,5	581,1
41,5	2490	4,1	546,5
42,0	2520	3,7	535,0
42,5	2550	3,3	531,6
43,0	2580	2,9	524,1
43,5	2610	2,5	510,5
44,0	2640	2,2	483,6
44,5	2670	1,9	468,7
45,0	2700	1,6	448,6
45,5	2730	1,4	448,7
46,0	2760	1,0	429,6
46,5	2790	0,8	406,9
47,0	2820	0,6	407,5
47,5	2850	0,4	398,4
48,0	2880	0,1	383,8

48,5	2910	0,0	396,6
49,0	2940	7,6	624,5
49,5	2970	8,4	871,1
50,0	3000	3,1	1009,6
50,5	3030	3,0	925,1
51,0	3060	1,4	716,7
51,5	3090	0,8	607,5
52,0	3120	0,8	605,2
52,5	3150	0,3	467,8
53,0	3180	13,1	581,3
53,5	3210	12,9	579,0
54,0	3240	8,8	871,3
54,5	3270	5,0	907,4
55,0	3300	4,9	908,8
55,5	3330	13,9	1240,4
56,0	3360	5,8	1330,9
56,5	3390	5,6	1318,6
57,0	3420	1,6	1049,3
57,5	3450	0,1	861,3
58,0	3480	0,0	871,2
58,5	3510	3,6	1117,5
59,0	3540	1,2	962,1
59,5	3570	1,2	959,4
60,0	3600	16,5	762,2
60,5	3630	14,6	1021,7
61,0	3660	14,5	1039,7
61,5	3690	11,0	1028,1
62,0	3720	8,3	1150,7
62,5	3750	8,3	1157,7
63,0	3780	6,6	1094,6
63,5	3810	4,9	1128,4
64,0	3840	4,8	1112,8
64,5	3870	4,1	705,1
65,0	3900	3,9	578,0
65,5	3930	3,9	575,1
66,0	3960	3,6	583,0
66,5	3990	3,3	557,9
67,0	4020	3,3	556,0
67,5	4050	3,0	541,8
68,0	4080	2,8	507,3
68,5	4110	2,8	505,7
69,0	4140	2,7	480,7
69,5	4170	2,6	458,5
70,0	4200	2,6	456,9
70,5	4230	2,5	431,8

APPENDIX 5: Participants

Danick Power ing.
v-p operation
Services Polytests inc.
450.741.3636
www.polytests.com

Maxime Martin
Technicien
Services Polytests inc.
450.741.3636
www.polytests.com

APPENDIX 6: Drawings and specifications

APPENDIX 7: Operator's manual

ABSOLUTE STEEL HYBRID
MODEL 211

GEAR HEAD STOVES
BY WOODSTOCK SOAPSTONE COMPANY

OWNER'S MANUAL

Tested To UL 1482-2011
Tested & Listed By Omni-Test Laboratories, Inc.
Report #000-S-00-0

Woodstock Soapstone Company, Inc.
66 Airpark Road, West Lebanon, NH 03784
Toll Free 1-800-866-4344 • www.woodstove.com

OUR PROMISE

We are sure you will enjoy your new stove. During the first six months that you own it, test its performance and experience the comfortable warmth of soapstone. If you are not thoroughly delighted with the beauty, quality, and energy efficiency of your stove, you may return it for a full refund, including the cost of return freight. This is the best consumer protection plan in the industry.

EPA APPROVAL

This Manual describes the installation and operation of: the **Model 211 Absolute Steel Hybrid Catalytic Wood Stove**

The Model 211 Absolute Steel Hybrid Catalytic Wood Stove meets the 2020 Standard U.S. Environmental Protection Agency's crib wood emission limits for wood heaters sold after May 15, 2020. Under specific test conditions, this stove has been shown to deliver heat at rates ranging from 10,000 to 48,000 BTU/hr., and average emissions of 0.5 grams/hr.

The Absolute Steel Hybrid has a manufacturer-set minimum low burn rate that must not be altered. It is against federal regulations to alter this setting or otherwise operate this wood heater in a manner inconsistent with operating instructions in this manual.

The Absolute Steel Hybrid contains a catalytic combustor, which needs periodic inspection and replacement for proper operation. It is against federal regulations to operate this wood heater in a manner inconsistent with the operating instructions in this manual, or if the catalytic element is deactivated or removed.

LISTING TO UL #1482-2011

The Model 211 Absolute Steel Hybrid Catalytic Wood Stove has been tested to UL Standard #1482-2011 for safety, and is listed by OMNI Test Laboratories. UL Standard #1482 is the standard for testing solid fuel heating appliances which is universally recognized by all national building regulatory agencies (SBCC, BOCA, ICBO) and individual states.

Please Note: Tested and Listed for US installations only

Report #000-S-00-0

LIMITED WARRANTY

Your Woodstock Soapstone Stove will be carefully inspected before shipment. We will replace any part which is defective in material or workmanship, free of cost, for a period of one year from the date of purchase. If a defect is discovered, please contact Woodstock Soapstone Company, Inc. for instructions regarding return or replacement of the defective part.

CATALYTIC COMBUSTOR WARRANTY

The catalytic combustor supplied with your Absolute Steel Hybrid Catalytic Wood Stove is a Clariant Corporation, stainless, durafoil catalyst. The catalyst is fully warranted for three years from the date of purchase against any defect in workmanship or materials that prevent the combustor from functioning when installed and operated properly. The catalytic combustor is additionally warranted for three years from the date of purchase for any deterioration in the stainless steel substrate material. For instructions regarding return or replacement of the catalytic combustor, please contact:

Woodstock Soapstone Company, Inc.
66 Airpark Road
West Lebanon, NH 03768
Phone: 1-800-866-4344 • Web: www.woodstove.com

GEAR HEAD STOVES

Gear Head Stoves is a division of Woodstock Soapstone Co., which is specifically 'geared' to designing and building high efficiency, low emission, and more affordable wood stoves. The first Gear Head Stove, The Ideal Steel Hybrid, was the grand prize winner of the 2013 Wood Stove Design Challenge competition, which judged on efficiency, emissions, affordability, innovation, and user friendliness. The Absolute Steel Hybrid is our R2Z (Race to Zero) stove, our internal challenge to design and build a stove that reaches zero wood stove emissions.

MODEL 211
ABSOLUTE STEEL HYBRID CATALYTIC
TABLE OF CONTENTS

WARRANTY INFORMATION/CERTIFICATIONS..... Inside Cover
EPA Certification, UL Listing, Warranty, Catalytic Combustor Warranty

INTRODUCTION & EFFICIENCY/EMISSIONS.....ii-iii
Absolute Steel Hybrid Wood Stove Explained

INSTALLATION..... 1-12
Installation, Location, Chimneys, Fireplace Installation, Clearance Table, Wall Protection, Floor Protection, Mobile Home Installation, Setting up Your Stove

OPERATION.....13-17
Seasoning Your Stove, Starting a Fire and Establishing Draft, Engaging the Catalytic Combustor, Reloading & Overnight Burning, Ash Removal, Surface Thermometer, Overfiring, Daily Use, The Fall-Away Handle, Firewood

CATALYTIC COMBUSTOR..... 18-21
How your Combustor Works, Inspection & Cleaning, Replacement, Catalytic Probe Thermometer, Frequently Asked Questions, Catalytic Combustor Warranty Information

MAINTENANCE..... 22-23
Stove, Stone & Glass Cleaning, Gasket Replacement, Routine Checks, End-Of-Season Maintenance, Creosote

TROUBLESHOOTING..... 24-25

SAFETY..... 26-27
Overview, Installation, Smoke & The Chimney, Heat, Ash Removal, Precautions, Emergency Procedures

PARTS LIST & DIAGRAMS..... 28-36

MAINTENANCE LOG & NOTE SHEET.....37

DIMENSION & SPECIFICATIONS..... Back Cover

Woodstock Soapstone Company, Inc.
66 Airpark Road, West Lebanon, NH 03784
Toll Free 1-800-866-4344 • www.woodstove.com

INTRODUCTION

The Absolute Steel Hybrid Combustion System Explained

The Woodstock Soapstone Company's tradition of building high quality, dependable wood stoves continues in the Absolute Steel Hybrid Wood Stove. This new design combines modern technology to achieve clean and efficient heating performance with rugged reliability and affordable steel construction.

While the Absolute Steel Hybrid shares some time tested features with other members of the Woodstock Soapstone family, it also includes some features that are unique. The Absolute Steel Hybrid has a large glass front that benefits from our proven air-wash design. The firebox is lined with thick soapstone panels, and the exterior is plate steel in order to make the Absolute Steel Hybrid more affordable.

The Absolute Steel Hybrid has a hybrid combustion system similar to the one that we designed in our Ideal Hybrid wood stove. The combination of the catalytic combustor and the secondary combustion system gives the operator a wide range of heat output while maintaining a clean and efficient burn. In addition to the Hybrid combustion design, the Absolute Steel Hybrid incorporates two automatic catalyst air ports to optimize the catalytic combustor's effectiveness.

Hybrid burn technology improves efficiency, lowers emissions, and allows for a wider range of output to meet the heating needs of the operator. Hybrid stoves from Woodstock combine the best attributes of both catalytic combustors and secondary combustion systems. A brief description of each is below, followed by a more detailed explanation.

Catalytic Combustion:
- Burns woodstove exhaust gases starting at 500° F
- Operates best at low to moderate burn rates
- Typically yields long duration burns that are clean and efficient
- Improves stove efficiency by generating heat from burning wood smoke

Secondary Combustion:
- Burns woodstove exhaust gases starting at approximately 1000° F
- Operates best at moderate to high burn rates
- Creates hot firebox for maximum heat output
- Provides a very active fire that is great for viewing

Catalytic combustors are well suited for very long burn cycles. Catalytic combustors have the ability to reduce or eliminate woodstove pollution at low stack temperatures. This means much cleaner, more efficient burns at low firing rates than is possible without a catalyst. The catalytic reaction eliminates harmful combustion byproducts and converts exhaust to water vapor and carbon dioxide. The catalytic combustor burns exhaust gasses and converts them to heat, which is captured inside the stove. This extra heat increases the overall efficiency and output of a catalytic wood stove. The combustor takes full advantage of the energy in wood smoke that would otherwise be lost up the chimney as pollution and wasted energy at low burn rates.

Secondary combustion systems are designed to maximize efficiency and reduce emissions as well, but they operate differently. The secondary combustion system introduces secondary air in the firebox to ignite the volatile gases produced by the burning wood. This reaction requires temperatures over 1000 degrees F to start breaking down the organic compounds in the wood smoke. Secondary combustion systems work best when the stove has high firebox temperatures and secondary combustion air introduced into the high temperature area at the top of the firebox. With secondary combustion the exhaust gases burn at very high temperatures before leaving the firebox, providing an unusual display of secondary flames in the top of the firebox.

In addition to primary and secondary air, the Absolute Steel Hybrid incorporates a system to introduce air directly to the catalytic combustor as it heats up. When the catalyst is fully engaged two self adjusting, bimetallic strips open small dampers to allow heated air into the exhaust path just upstream from the combustor. This dedicated "catalyst air" keeps the combustor active and helps control primary and secondary burn rates. As the stove and chimney heat up and draft is increased, more catalyst air is added automatically. This has the effect of stabilizing primary and secondary air and at higher temperatures will actually reduce primary and secondary air. The catalyst air design acts similar to a barometric damper.The catalyst air improves emissions and efficiency at high burn rates, provides overfire protection, and stabilizes the burn rate automatically.

These systems are not mutually exclusive and have been designed to work together. The Absolute Steel Hybrid is designed to utilize each system depending on the conditions present in the firebox. This makes operating the Absolute Steel Hybrid as simple as possible while providing a clean and efficient burn over a wider range of heat output.

The Absolute Steel Hybrid wood stove. The perfect combination of affordability, innovative combustion technology, and rugged construction.

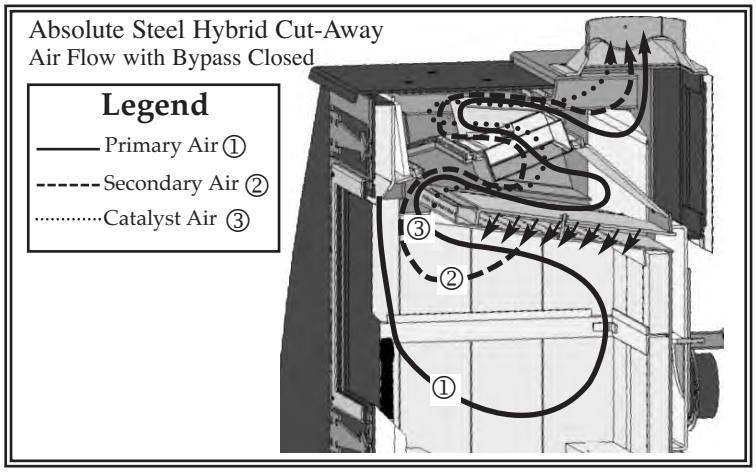

EFFICIENCY & EMISSIONS

Inside Testing of the Absolute Steel Hybrid

EPA TEST DATA

The following data is direct from our 2016 EPA tests for the Absolute Steel Hybrid. The Absolute Steel Hybrid meets/exceeds the 2020 EPA Standard of 2.0g/hr maximum emissions set by the EPA in 2015. The current test protocol specifies "crib wood" using dimensional Douglas Fir. The efficiency is determined using High Heat Value (HHV). The weighted emissions average is 0.50 grams per hour, and the weighted efficiency is 77%.

Model 211 Absolute Steel Hybrid

Test No.	Burn Rate kg/hr	Test Min	Ave. Emission Rate g/hr	HHV (OHE)	Heat Output (BTU/HR)	Weighting Factor
1	0.956	399	0.140	80.30	14,426	24.18%
2	1.042	354	0.200	79.50	15,213	22.42%
3	1.415	269	0.500	74.80	19,895	19.29%
4	1.451	279	0.420	76.20	20,797	17.38%
5	3.411	105	1.520	70.70	45,317	16.74%
	Weighted average emissions rate:				0.50 g/hr	
	Weighted Average Heating Efficiency (OHE)				77%	

FACTORS EFFECTING EFFICIENCY & EMISSIONS

1. **Burn Rate:** As shown in the table above the lowest emissions and greatest efficiency was achieved by running the Absolute Steel Hybrid at a low-medium burn rate (indicated in Tests 1-4). A lower burn rate gives the combustor more time to effictively burn the volitale gases as they enter into the catalytic combustor (see discusstion in the Catalytic Combustor Section of the Manual). When operating your stove at a lower burn rate you will achieve a cleaner burn over a longer period of time. Low burn rates are also how you achieve desirable long burn times of 10+ hours.

2. **Wood Quality:** Cord wood with a moisture content between 15-22% is ideal for burning. The Absolute Steel Hybrid will still burn wood with a higher moisture content with great effectiveness, however, the energy loss at start up and reloading is significant. During the first stage of wood burning the moisture content within the wood is expelled creating steam. The higher the moisture content the lesser the available heat value.
Kiln Dried Wood: Approximately 8600 BTU Available/per pound
20% Moisture Content: Approximately 6,200 BTU Available/per pound
50% Moisture Content: Approximately 4,000 BTU Available/per pound

3. Effective Fire Starting: The most effective method for an emissions free start is a top down fire. A top down fire is built with the larger splits on the bottom of the firebox, the second layer should be medium sized splits, and if possible running perpendicular to the large splits on the bottom, and the third layer should be small splits On top of the small splits a generous amount of small very dry kindling and newspaper will be placed at the top. The newspaper and kindling will produce enough heat very quickly allowin the secondary air and catalytic combustor to ignite within minutes. You may need to leave the loading door cracked open to allow enough oxygen in for a quick start. Within a few minutes you should be able to engage the combustor and start the clean burn cycle.

DIMENSIONS & SPECIFICATIONS

H x W x D (**includes ash lip & skirting**). . . . . 33.25″x30″x27.25″
Footprint. . . . . 25″ W x 20″ D
EPA Certified. . . . . Yes
Listed to UL 1482. . . . . Yes
EPA Emissions Rating. . . . . 0.5 grams/hr
EPAEfficiency. 77%
Flue Height to Center (Standard Leg). . . . . 28″
Catalytic Combustor & Secondary Air . . . . Standard
Flue Height to Center (Tall Leg Version). . . . . ″
Bottom Heat Shield. . . . . Standard
Area Heated. . . . . up to 1,800 sq. ft.
Weight. . . . . 490 lbs.
Flue Exit. . . . . Top or Back

Flue Size. . . . . 6″
Ash Pan. . . . . Optional
Loading Door. . . . . Right or Left Side
Back Clearance (no protection). . . . . 14″
Loading Door Opening (W x H). . . . . 12″x10″
Back Clearance (w/Heat Shield Kit) . . . . . 6″
Draft Control. . . . . Manual
Side Clearance. . . . . 19″
Wood Length (Maximum). . . . . 16-18″
Window Size (viewable).....14.5″ W x 13″H
Firebox Size. . . . . 2.45 Cubic ft.
Burn Time. . . . . 10-14 hrs.
Heat Output Range. . . . . 10,000-48,000 BTU/hr

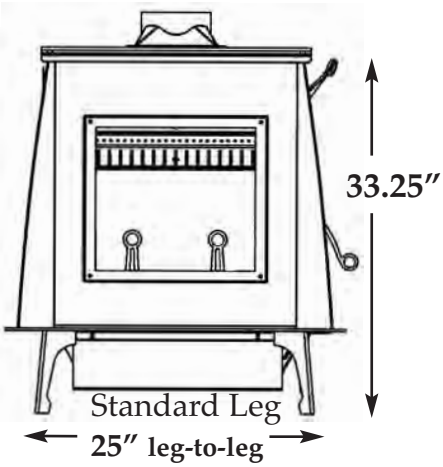

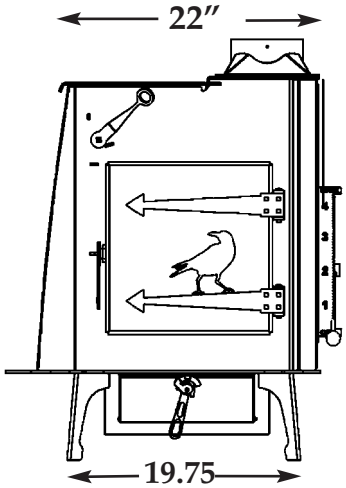

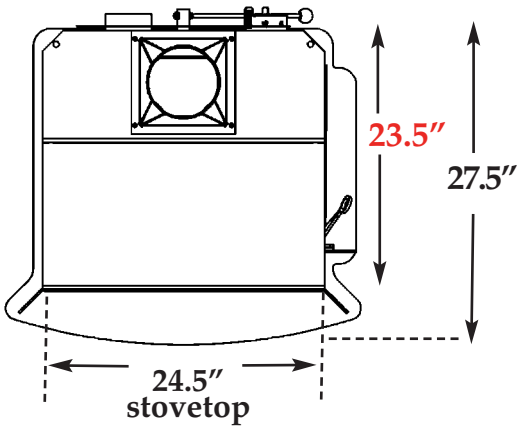

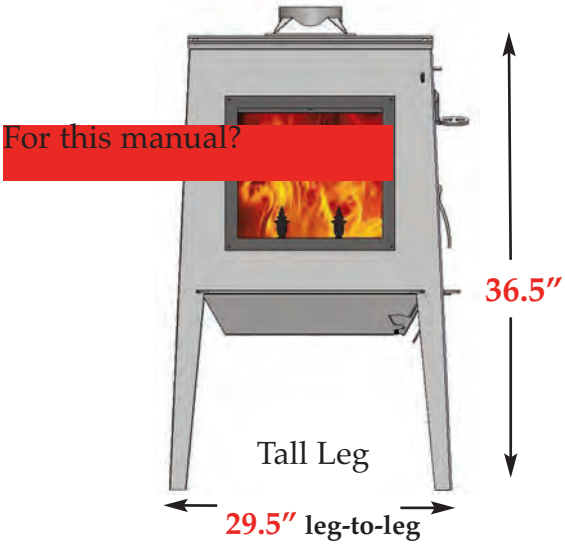

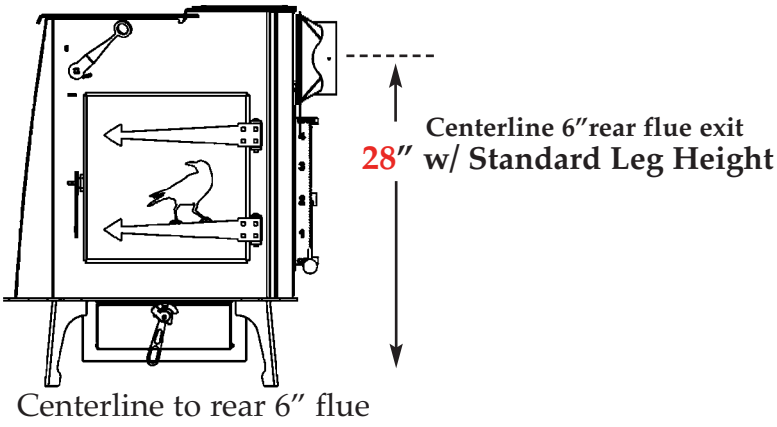

GEAR HEAD STOVES
BY WOODSTOCK SOAPSTONE COMPANY

INSTALLATION

For over two centuries, New Englanders have heated their homes with soapstone stoves. A properly installed and operated soapstone stove will warm your home and delight your eye for a lifetime.

Read this entire manual carefully. It explains how to install your Woodstock Soapstone Absolute Steel Hybrid Wood Stove safely and how to operate it correctly and efficiently. The clearances and procedures recommended in this guide are in compliance with the recommendations of the National Fire Protection Association (NFPA), the Underwriters Laboratories (UL), and the U. S. Environmental Protection Agency (EPA). You may feel some of them are very stringent, but they should be followed. They were designed to protect you, your home, and the environment. **Improper installations are a major cause of serious fires. Failure to follow instructions may result in property damage, bodily injury, or death.**

Before installing a woodstove, check your local building codes and any requirements established by your insurance company.

You may need a local building permit to install your stove. Any changes in your home must comply with building codes. If the codes have not been fully updated, you may want to check with the Building Inspection Department or your local Fire Department. A qualified stove installer should be aware of any changes and updates to local and state codes and may be best suited to handle your installation work.

Many chimney sweeps are qualified installers. If you are unfamiliar with sweeps or need to locate a certified sweep in your area, you can check listings at www.csia.org (Chimney Safety Institute of America). Builders and contractors are another option. In some cases, homeowners install their own stoves. Before installing your stove, please review carefully the stove installation, clearance, and safety information in this manual. Woodstock Soapstone has NFI (National Fireplace Institute) certified woodburning specialists on staff and available to answer any questions you may have about your installation. If you have questions, please call us toll free at 1-800-866-4344.

You should notify your insurance company that you are using a woodstove. Before you light your first fire, have a local building inspector and your insurance representative inspect, and approve in writing, your installation.

When this room heater is not properly installed, a house fire may result. To reduce the risk of fire, follow the installation instructions. Contact local building or fire officials about restrictions and installation inspection requirements in your area.

LOCATION

A stove which is centrally located will heat the greatest area of your home. Heat should be able to circulate easily into nearby rooms. Placing your stove near an open stairway or register in the floor will help transfer heat to other rooms.

Other installation considerations are:

- Clearance to Combustibles
- Adequate Space for Wood Loading and Ash Removal
- Room Traffic Patterns

Most people install their stove in a room they use frequently where they can enjoy the beauty and comfort of the stove. This also helps in the monitoring and reloading the stove as needed.

A well-planned placement will enhance your enjoyment of your stove and may save installation costs.

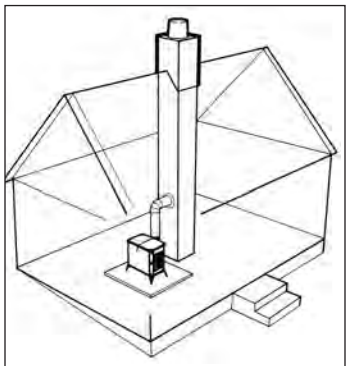

The best location for a chimney and woodstove is in the center of the house. The chimney will be warmer, draft will be better, and radiant heat will be distributed more evenly.

ALCOVE INSTALLATIONS

THE MODEL 210 IDEAL STEEL HYBRID WOODSTOVE IS <u>NOT</u> APPROVED FOR AN ALCOVE INSTALLATION. AN ALCOVE IS DESCRIBED AS AN AREA LESS THAN 512 CUBIC FEET, WHICH IS EQUIVALENT TO AN 8'X8'X8' SPACE.

CHIMNEYS

Your chimney is a critical component of your wood heating system. A properly designed and constructed chimney will help to provide safe and efficient woodstove operation. Hot exhaust rising up through the chimney also pulls combustion air into the stove through the air damper. If a chimney is too short, or the flue too large, the hot exhaust will cool and slow down. This can lead to poor stove performance, smoke spillage, back puffing, and even creosote build up in the chimney itself. An excessively tall chimney could lead to a strong draft, which may make the fire difficult to control with the stove damper. A draft that is too strong could result in over firing the stove and lead to damage to the steel components as well as the catalytic combustor. An uncontrollable burn or excessive stove or pipe temperatures can indicate excessive draft. Whether you are installing a new chimney, or adapting an existing chimney to your woodstove, close attention to chimney height, flue size, and location should be considered.

Chimney Flue Sizing:

The ideal flue size for the Absolute Steel Hybrid is 6" (28 sq.in.^{2}), which is the same diameter as the stove's flue collar.

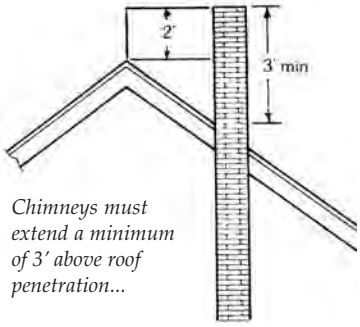

Chimneys must extend a minimum of 3' above roof penetration...

If upsizing needs to occur due to an existing chimney the following general rules apply:

1. **Interior Chimney** (no walls of the chimney exposed to the outside below the roofline): the inside cross-sectional area of your chimney should be no more than 3x (85 in^2) the cross-sectional area of the woodstove flue collar.
2. **Exterior Chimney** (if there are one or more walls exposed to the outside below the roofline) - The flue should be no more than 2x (57 in^2) the cross-sectional area of the flue collar.

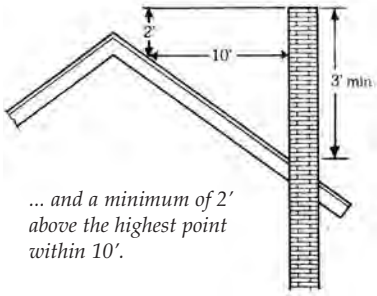

... and a minimum of 2' above the highest point within 10'.

Recommendation: The Absolute Steel Hybrid has a 6 inch flue collar, thus an 8 inch x 10 inch rectangular or 10 inch round flue tile for an **inside** chimney are the maximum flue sizes we recommend for this stove. For an **outside** chimney, an 8 inch x 8 inch square or 8 inch round would be the largest acceptable. The smallest size we recommend is 6 inches round, as the flue should not be less than the flue collar size.
Note: For flues that exceed the recommended area, a stainless steel chimney liner is recommended.

Height Requirements:
The chimney must extend 3 ft. above the point where it passes through the roof and must also be 2 ft. higher than any roof surface or obstruction within 10 feet (measured horizontally) of the chimney. You should check your local building codes for any other requirements.

The recommended minimum chimney height is 15 feet from the flue collar of the stove to the top of the chimney. This includes connector pipe and chimney pipe. There may be other factors to conform to code for clearances on the roof, high wind, high altitude, etc., that may make the *minimum* height undesirable or a violation of building codes.

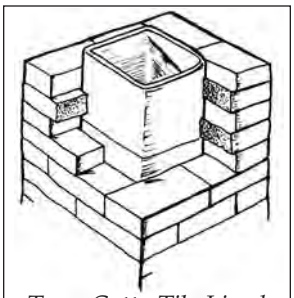

Terra Cotta Tile Lined Masonry Chimney

CHIMNEY TYPES

DO NOT CONNECT THIS UNIT TO A CHIMNEY FLUE SERVING ANOTHER APPLIANCE.

There are two acceptable types of chimneys: (1) A chimney complying with the requirements for Type HT chimneys in the Standard for Chimneys, Factory-Built, Residential Type and Building Heating Appliance UL 103 **OR** A code-approved masonry chimney with a flue liner.

Lined Masonry Chimneys:

Always have the chimney inspected prior to your stove installation. If your chimney is not lined with appropriately sized clay flue tiles, or the clay tiles are old, cracked, damaged or otherwise compromised, a stainless steel chimney liner or poured liner will be required. Depending on the condition of your flue or clay tiles, the stainless steel liner may need to be wrapped in a high temperature insulation blanket. A liner may also be recommended if your flue is too large for the draft to flow properly (please refer to the section on chimney sizing). Our customer service department can answer any questions regarding the use of a liner and/or insulating blanket. Call 1-800-866-4344.

Installing a Stainless Steel Liner in a Masonry Chimney

Existing chimneys should be checked twice a year for obstructions, creosote deposits, surface cracks, chemical deterioration and poor construction. Any damage should be repaired immediately. Two other chimney

related areas that should be checked are chimney penetrations at the floor or ceiling joists, and at the roofline. There should be at least 2 inches of clearance between the chimney and floor joists or other combustible materials. Poor flashing between the chimney and the roofline can cause leaks and deterioration of chimney mortar.

You should make preliminary checks, but if you have any doubts, or are unfamiliar with chimney construction, cleaning, or maintenance, have a local fire official or certified chimney professional inspect your chimney. If repairs are required, be sure to use someone who is knowledgeable in chimney work and familiar with local code requirements.

In addition: All brick or cinder block chimneys should have clean out access with a tightly fitting door. Masonry chimneys should have a wash at the top. All chimneys should have a cap to keep out rain and snow and to minimize downdrafts caused by wind.

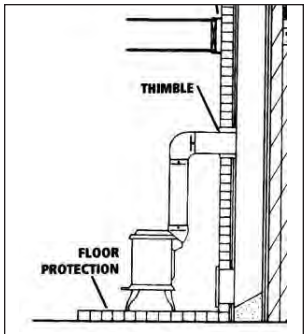

Connecting your stove to a masonry thimble.

Passing Through A Combustible Wall:

With an exterior chimney, in most cases the chimney connector (or stove pipe) will need to pass through a combustible wall. The following are acceptable methods:

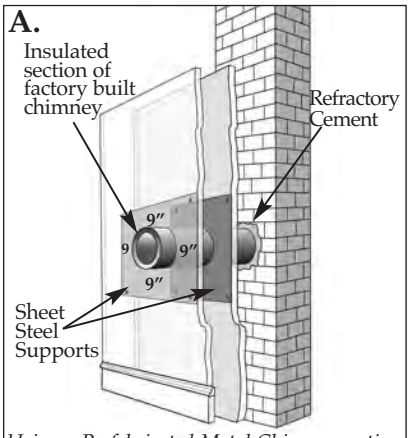

Using a Prefabricated Metal Chimney section to connect to an existing masonry chimney located behind a combustible wall

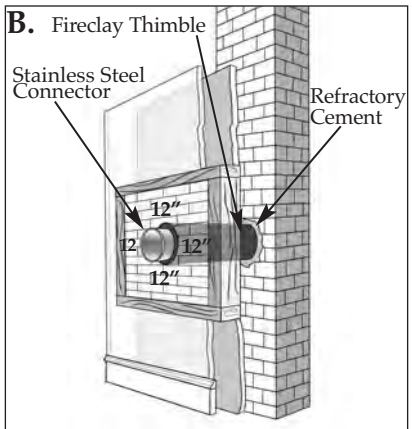

The minimum clearance for a single wall metal stovepipe and terra cotta thimble at the chimney connection is 12″

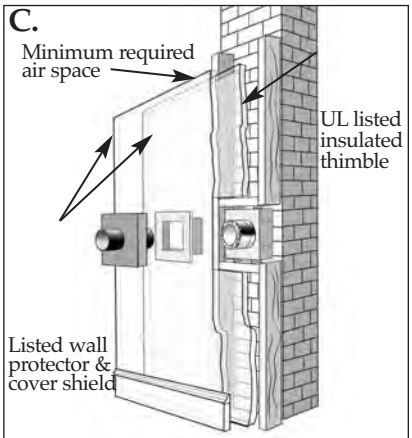

Use a UL listed and approved wall pass thru kit.

A. Use a section of Solid Insulated Prefabricated Metal Chimney to connect to the chimney - Use a section of insulated prefabricated 2100° Class A chimney pipe listed to UL 103 HT (at least 1″ of insulation or greater) the same inside diameter as the stove pipe and maintain a 9″ air space between the wall of the prefabricated chimney and the combustible wall. This section of chimney pipe can be supported by a sheet metal plate securely fastened to the combustible wall, with a hole cut in the middle of it. This will close the gap around the chimney pipe and the framed opening. (See Diagram A Below)

B. Build a solid brick surround around a tile liner - Frame a 3.5″ thick brick surround into the combustible wall you need to pass through. Maintain a minimum 12″ brick separation from the clay liner to combustibles. The minimum 5/8″ thick clay liner should be cemented in place and run from the outer surface of the brick to the inner surface of the chimney. (See Diagram B Below)

C. There are also UL Listed kits available that are specifically designed for passing through a combustible wall. For more information on these kits, please contact Woodstock Soapstone Company. Please note: there are several UL listed wall pass through kits available, always follow the specific manufacturers installation instructions. (See Diagram C Below)

For other methods, please refer to NFPA 211.

REMEMBER, UNPROTECTED SINGLE OR DOUBLE WALL STOVE PIPE SHOULD NOT PASS THROUGH A COMBUSTIBLE WALL OR CEILING TO CONNECT TO THE CHIMNEY. YOU MUST USE AN APPROVED METHOD WHICH PROVIDES GREATER PROTECTION THAN SINGLE OR DOUBLE WALL PIPE.

Prefabricated Metal Chimneys:

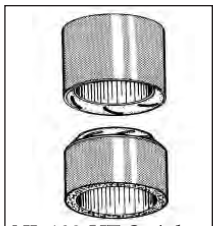
UL 103 HT Stainless Chimney Connection

For high efficiency, freestanding woodstoves, like your Woodstock Soapstone stove, a Prefabricated Metal Chimney must be listed as Class A and carry a UL Listing of 103 HT (high temperature). The "UL 103 Type HT Class A" prefabricated chimney will have a temperature rating of 2,100° F.

There are prefabricated chimney systems that are approved only to 1,700° F and are suitable only for fireplace inserts or factory built fireplaces. **DO NOT** use these with your Woodstock Soapstone stove.

At the point of the first penetration of a combustible surface (i.e., wall or ceiling) all subsequent venting components need to be prefabricated "UL Type HT Class A". If your prefabricated chimney goes through a living

space it must be enclosed, and that enclosure must conform to clearance standards for the prefabricated chimney. Your chimney must pass through your roof and extend above the roof line in accordance with code standards. Please refer to height requirements on Page 2.

Prefabricated Chimney Configurations

The diagrams below represent the most common and acceptable installations using prefabricated chimney pipe. The necessary components are listed and shown in their appropriate locations. These components are Class A listed to U.L. 103HT (tested to 2100 degrees F.) Only components listed to UL 103HT can be used to install your wood stove. Installation instructions are described below **as examples only**. More detailed instructions are available through Woodstock Soapstone or the pipe manufacturer. **ALWAYS FOLLOW THE SPECIFIC MANUFACTURER'S INSTALLATION INSTRUCTIONS.**

Installation 1- Flat ceiling through the roof

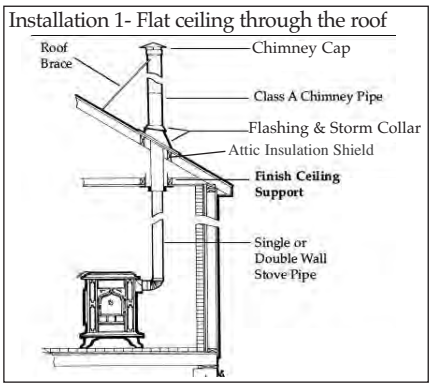

Installation 1- Flat ceiling through the roof

First, determine where the stove will be placed. Pay close attention to all required clearances for the stove **and** connector pipe. Next, use a plumb line to locate the finish ceiling support in the ceiling above. Cut the appropriate sized hole in the ceiling and frame in the necessary supports to secure the ceiling support. Install the pipe adapter onto the first section of chimney pipe, and lower them into the ceiling support. Use an insulation shield in the attic to keep any insulation away from the pipe. If the attic is a living space the chimney pipe must be fully enclosed. As the pipe extends through the roof, install the appropriate flashing and storm collar to keep the weather out. As the height of the chimney increases to meet code, it may be necessary to install a roof brace (typically recommended at 5' intervals). All chimneys should have the appropriate cap installed at the top to reduce wind and weather related downdrafts as well as deter any animals from building nests. The connector pipe should extend from the flue collar of the stove to the pipe adapter at the ceiling support. The male (crimped) end should always point down toward the stove. Be sure that each joint has enough overlap for a secure connection. All connections should be fastened with screws, including at the flue collar and pipe adapter. (Please refer to the manufacturers full set of installation instructions).

Installation 2- Pitched/Cathedral Ceiling through the roof

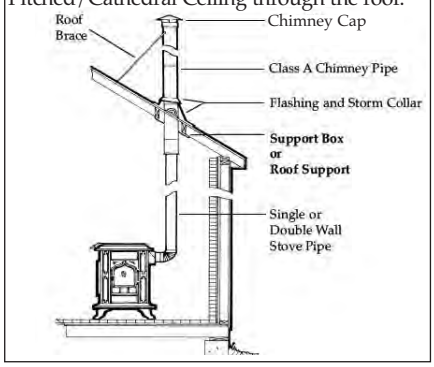

Installation 2
Pitched/Cathedral Ceiling through the roof.

Determine where the stove will be placed. Be sure all clearance requirements are satisfied. Choose the appropriate support for your installation (support box or roof support). Use a plumb line to locate the support in the ceiling above. Cut the appropriate sized hole in the ceiling and install the necessary framing to secure the support. Install the support according to its specific instructions. Be sure that the support hangs down below the ceiling far enough to maintain proper clearance for the connector pipe (steeper slopes require more chimney pipe below the ceiling). Install the pipe adapter to the first section of chimney pipe and lower it into the support box (or connect it to the bottom of the roof support). As the pipe extends through the roof, install the appropriate roof flashing and storm collar. Install the proper chimney pipe lengths to meet code and recommended chimney height. It may be necessary to install a roof brace for stability. Always install the appropriate cap to the top of the chimney. Double wall connector pipe is recommended for installations that have 8' or more from the stove to the chimney. Be sure that all joints in the connector pipe are secure and fastened with screws, including at the flue collar and chimney pipe adapter. (Please refer to the manufacturers full set of installation instructions).

Installation 3- Through the wall

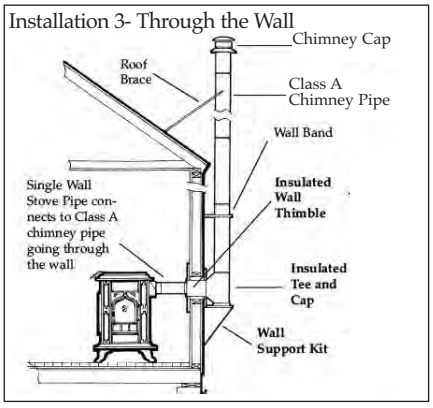

Installation 3- Through the Wall

This installation requires the use of an insulated wall thimble to penetrate a combustible wall. Typically a 9"-12" chimney pipe and pipe adapter will pass through the thimble and make the connection between the interior connector pipe and an insulated tee with a clean out on the outside of the bulding. The tee and chimney rising up from it rest on a wall support designed to bear the weight of the chimney. Install lateral supports as specified as the chimney rises along the exterior wall. The appropriate flashing and storm collar should be installed if the chimney penetrates an eave or overhang. An offset of 15 or 30 degrees may also be used to go around an overhang. As the chimney extends above the roof to meet code recommended heights it may be necessary to install a roof brace. (Please refer to the manufacturers full set of installation instructions).

Stovepipe (Connector Pipe):

Connector pipe is either single wall (sheet metal) or double wall (sheet metal outer pipe with a stainless steel inner pipe). We strongly recommend 22 gauge pipe (26 or 28 gauge is too thin for use with a woodstove). The connector pipe should be 6 inch diameter to match the flue collar of the stove. If your connection to either a masonry chimney or prefabricated chimney system is more than 8 feet tall, we recommend the use of double wall connector pipe. If you need to reduce clearances for your connector pipe installation, double wall connector pipe would be recommended. All pipe connections, including at the flue collar, must be secured with screws. **DO NOT USE GALVANIZED SINGLE WALL PIPE.**

Connector pipe is designed to connect your stove to your masonry lined or approved prefabricated chimney system. **CONNECTOR PIPE SHOULD NEVER BE USED AS A CHIMNEY AND SHOULD NEVER PASS THROUGH A COMBUSTIBLE WALL, CEILING, WINDOW, CLOSET, OR ROOF.** At the point where your stovepipe meets the chimney, you must either vent into a masonry chimney with approved non-combustible transition, or a prefabricated chimney system with a specially designed transition piece.

FIREPLACE INSTALLATION

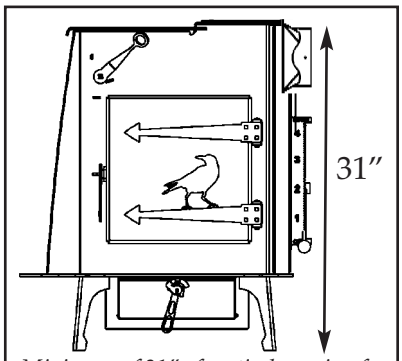

Minimum of 31″ of vertical opening for 6″ pipe to pass under the fireplace lintel.

Your Model 211 Absolute Steel Hybrid Woodstove has an option of rear venting. The centerline height of the rear flue is 28″, in order for the exiting pipe to clear the fireplace lintel, the opening height will need to be 31″ or greater. Installing the Absolute Steel Hybrid stove in a fireplace setting is a great way to enjoy the view of the fire, while greatly increasing the efficiency and reducing heat loss to the fireplace chimney.

We do not recommend placing the stove inside the fireplace, as it would make routine maintenance such as cleaning the combustor more difficult, and much of the heat radiating off the stove would not circulate into the room.

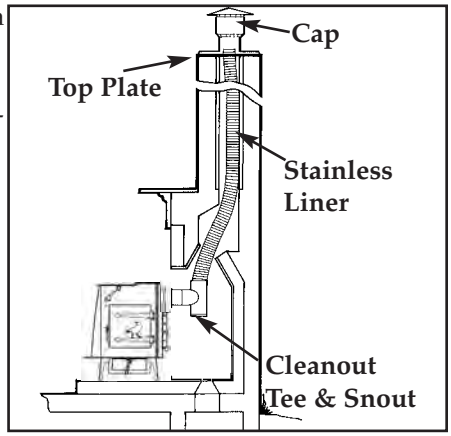

The preferred method for installing a stove in front of a fireplace is by running a stainless steel 'flex' liner down the chimney, connecting it to the stove at the fireplace. Chimneys with large flues should be relined to achieve proper draft. If the chimney does not have flue tiles or if the tiles are cracked or compromised, an additional insulating material must be used.

It is important that there be a secure connection between the stove and the flue liner. It is **NOT** acceptable to simply install a plate in front of the fireplace and run a stovepipe through it. The stove pipe must connect with the liner for a continuous outlet to the top of your chimney.

Stainless steel flex liner kits come in a variety of lengths and are readily available. These kits include a flexible stainless steel pipe, tee with snout & clean out, a block-off plate for the top of the chimney, and a cap. Please contact Woodstock Soapstone Company for more information on these kits. **ALWAYS FOLLOW THE SPECIFIC MANUFACTURER'S INSTALLATION INSTRUCTIONS.**

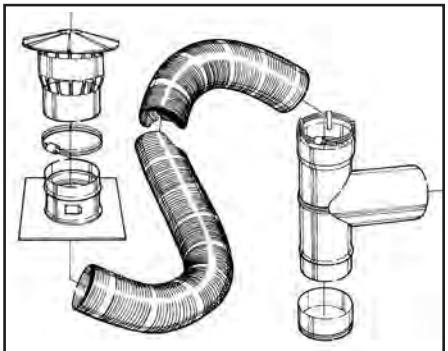
Components of a standard liner kit: Tee with clean out& snout, stainless flex liner, top block-off plate & cap.

If the fireplace surround is clad in wood trim, the proper clearance to a combustible will need to be maintained. Please refer to the clearance charts on pages 8-10. An unprotected wood mantel needs to be a minimum of 30″ from the top of the stove. If a mantel shield is installed that clearance can be reduced to 12″.

DO NOT VENT YOUR WOOD STOVE THROUGH A FACTORY BUILT FIREPLACE UNLESS IT IS SPECIFICALLY LISTED FOR SUCH AN INSTALLATION Most factory-built fireplace chimney systems are only rated to 1,700° F, which is not sufficient for a freestanding wood burning stove.

FLOOR PROTECTION REQUIREMENTS

Your Woodstock Soapstone stove must be set on an approved hearth or floor protection. The hearth protects your floor from two hazards:

- Heat Transfer: Heat radiation from the bottom, front, and sides of the woodstove
- Ember Protection: Sparks and hot coals that may fall out during ash removal and reloading of firewood

DO NOT INSTALL YOUR WOODSTOCK SOAPSTONE STOVE ON A COMBUSTIBLE SURFACE (WOOD, CARPET, LAMINATE, OR VINYL, FOR EXAMPLE).

Even if you have a stone or tile overlay on wood, it is still considered combustible since the surface materials will not provide adequate heat transfer protection.

Your stove **MUST** sit on one of the following:

- A hearth pad of solid masonry (brick or tile on concrete and mortared in place)
- A prefabricated hearth pad listed to UL1618 approved standards. These pads are made to be placed on an existing floor. Woodstock Soapstone Company has a good selection of these pre-made pads.
- A custom designed pad constructed of approved non-combustible materials which will protect the floor from sparks, hot coals, and ashes; and prevents heat from being transferred onto the floor beneath.

IF YOU CHOOSE TO BUILD YOUR OWN HEARTH PAD

1) Start with a plywood base or subfloor.
Over this apply:

2) a layer of insulating board with an R-Value of at least 0.41. Depending on the material you choose, the insulating board can be as little as 1/2″ thick. For additional help with material specifications, contact Woodstock Soapstone Company at 1-800-866-4344 or info@woodstove.com.
Over this apply:

3) 1/4″ or greater of a decorative, non-combustible material such as tile, slate, stone, or brick. Use mortar or grout to set the material in place, then grout the seams.

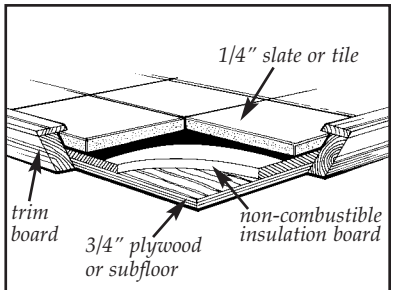

You can build your own hearth pad to fit your decor. The hearth pad must meet a minimum R value of .41

Specifications for floor protectors may be listed in terms of R-value, K-value, or C-value. To convert K or C value to R-value use the following formulas.

K to R: R=1/K x T (Thickness of the alternate material)
C to R: R=1/C

Once alternate materials have been converted to R-values, the values of multiple layers can be added to determine the combined protection. If the overall R-value meets or exceeds the specified .41 then the materials are acceptable.

R-values of common hearth materials:

Ceramic Tile	1/4″	0.020
Granite	1/4″	0.020
Slate	1/4″	0.025
Cement Mortar	1/2″	0.025
Cementboard	1/4″-1/2″	0.20-0.39
Common Brick	2.25″	0.450
Common Brick	4.00″	0.800
Mineral/Ceramic Fiber Board	1/2″	1.10-1.470

Please Note: Always check with the manufacturer of the hearth material used to verify the R or K value.
K Values cannot be added. Convert to R value before adding multiple layers.

DO NOT USE: Old-fashioned stove boards that were commonly sold in hardware stores as they **DO NOT** have adequate protection and **ARE NOT** approved for primary floor protection under your stove.

Hearth Rugs also **ARE NOT** meant to be used as primary hearth protection. These are made to be used in addition to an approved hearth, and are an auxiliary decorative protection. They are not a substitute for an approved hearth pad.

Hearth Sizing:

Clearances for your Absolute Steel Hybrid stove on the front, back and sides must be taken into consideration when determining the placement and size of your floor protection. The floor protection must extend under any horizontal connector pipe and 2 inches beyond each side of that connector.

PARALLEL HEARTH PAD

MINIMUM DIMENSIONS

A. Floor protection in front of load door opening = 8″
B. Protection on loading door side = 16″
C. Floor protection non-loading door sides = 8″
D. Floor protection behind stove (top vent or rear vent) = 6″

Minimum hearth size in a parallel installation is 34″D x 49″W. Recommended size is 46″ D x 57″W or larger.

A 48″ x 57″ rectangular hearth pad will allow for 6″ behind the stove, 16″ on either side, and 10″ in front of the stove. The hearth pad must have a minimum R value of 0.41 (1/2″ of "cementboard' covered with 1/4″ of tile or stone).

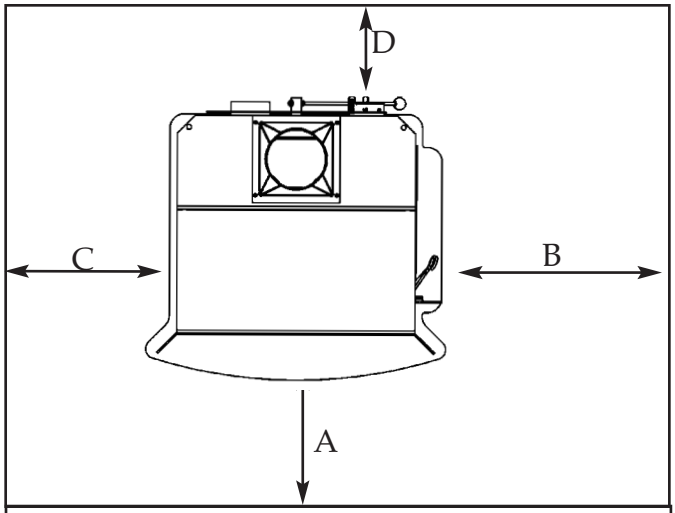

PARALLEL HEARTH PAD
Measurements taken from stove body
Stove Body Width 25″
Stove Body Depth 20″

CORNER HEARTH PAD

Minimum hearth size in a corner installation must be 54″x54″ (with the front corner cut off). **NOTE:** On a hearth of minimum size, the stove will not be centered left to right, but will meet the minimum required clearances.

Calculating a Corner Hearth Pad (per NFPA 211):
A=C x 1.414 + W/2 + D + Front Hearth Requirement
A =distance from corner to the front of the hearth pad
C = clearance from rear corner of appliance to wall (6″ w/ rear heat shield)
1.414 = a constant
W/2 = one half the appliance width (12.625″)
D = appliance depth (23.5″)
Front Hearth Clearance= 16″

Example:
Ideal Steel with the Rear Heat Shield & Pipe Shield
A= 6″ x 1.414 + 12.625 + 24″+16″ **A= 61″**

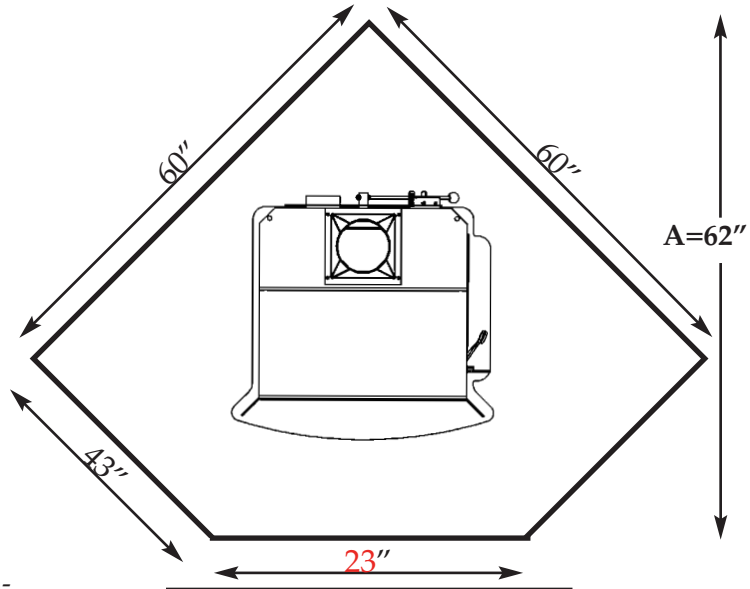

CORNER HEARTH PAD
Ideal Steel Hybrid shown above centered left to right

WALL PROTECTION

The Model 211 Absolute Steel Hybrid stove has been tested to UL standards for clearances to combustible walls. The minimum clearances to unprotected walls are as follows:

Minimum clearances with no heat shields to unprotected combustible walls:

From the back---------- 14″
From the sides----------19″

DO NOT ASSUME THAT A WALL IS NOT COMBUSTIBLE BECAUSE IT HAS A NONFLAMMABLE SURFACE. A wall with any combustible materials in it must be considered combustible. For example, a brick wall attached to wood studs is considered a combustible wall. Over time, heat will pass through bricks and heat the wood, lowering the ignition temperature of the studs, possibly resulting in a fire. As waves of radiant heat energy meet a combustible object, heat is absorbed and the temperature of the object is raised, which can result in spontaneous combustion. Similarly, wood-framed walls which are covered with tile, stone or fire-rated sheetrock must be considered combustible. Fire-rated sheetrock is also considered combustible due to the paper covering.

If you wish to install your stove closer to a combustible wall than standard clearances will permit, you can either attach an approved stove & pipe shield, or mount a ventilated, non-combustible shield on the wall.

Stove and Pipe Shields:

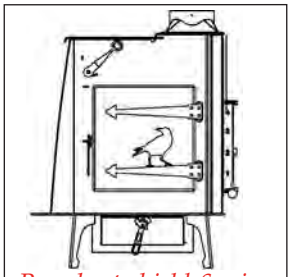

Rear heat shield & pipe shield reduce required rear clearance to 6″

Clearances can be reduced by attaching an approved heat shield, part #xxxx and pipe shield, part #W-413. Woodstock Soapstone Company carries heat shields specifically designed for this stove. When using one or both of these shields, **clearance is measured from the back of the shield to the combustible wall**. The clearance behind the stove can be reduced to 6 inches. The clearance behind the pipe can be reduced to 6 inches.

Clearance Table:

The Absolute Steel Hybrid can be installed at a 14″ clearance with no additional protection, if the stove pipe is top vented, and the provided shield, is used to cover the rear flue cover plate. To further reduce the rear clearance to 6″, you must attach an approved rear heat shield and a 36″ pipe shield.

Clearance Table For Model 211 Absolute Steel

Type of Installation▶ / Type of protection▼	*Clearance from stove back, top vent, with stove pipe which goes straight up*	*Clearance from stove back and pipe, which goes straight back*	*Clearance from stove back and vertical single wall connector pipe* ***with elbow at stove back*** *Controlling clearance		Stove Sides	
			Stove Back	Stovepipe		
No Protection	14″	14″	23″	15″	19″	
With 36″ Pipe Shield			14″	6″	19″	
With Approved Rear Heat Shield and 36″ Pipe Shield	6″		14″	6″*	19″	
3 1/2″ thick Masonry Against Combustible Wall*	12″	12″	20″	12″	13″	*See note below regarding NFPA 211 clearance reduction methods and implementation.*
3 1/2″ thick Masonry with 1″ ventilated airspace*	12″	12″	14″	6″	12″	*See note below regarding NFPA 211 clearance reduction methods and implementation.*
24 ga. sheet metal with 1″ ventilated airspace*	12″	12″	14″	6″	12″	*See note below regarding NFPA 211 clearance reduction methods and implementation.*
1/2″ thick non-combustible insulation board with 1″ airspace*	12″	12″	14″	6″	12″	*See note below regarding NFPA 211 clearance reduction methods and implementation.*

*These clearance reductions meet or exceed requirements of NFPA 211, Standard for Chimneys, Fireplaces, Vents, and Solid Fuel Burning Appliances. Approved NFPA 211 clearance reduction methods **DO NOT** allow stove clearances to be reduced below 12″. **NFPA WALL SHIELDS MUST BE SIZED TO NFPA 211 SPECIFICATIONS. CONSULT NFPA 211 AND A QUALIFIED EXPERT BEFORE IMPLEMENTING THESE REDUCTIONS.**

The only approved method allowing for a rear stove clearance less than 12″ is the Approved Rear Heat Shield (#IS-256) provided by Woodstock Soapstone Co. If your installation requires the use of the Approved Rear Heat Shield call 1-800-866-4344.

- These clearances apply to walls, ceilings, furniture and other combustibles.
- The 36″ Vertical Stack Shield attaches to the back of the stove pipe and prevents excess heat from being radiated from the pipe. Heat shield protection is only required for the first 36″ of vertical connector pipe.
- At least 30″ is required from the front of the stove to combustibles (such as curtains, wall hangings, and furniture).

The same clearances from your stove and stove pipe apply to both fireplace and freestanding installations. Be particularly careful to check clearances to a wood mantel or a wood fireplace facade. You must maintain a 30″ clearance to an unprotected wood mantel. See Fireplace Installations on Page 5.

CLEARANCE INSTALLATION DIAGRAMS

1) Parallel Installation, Single Wall Pipe, Top Vent

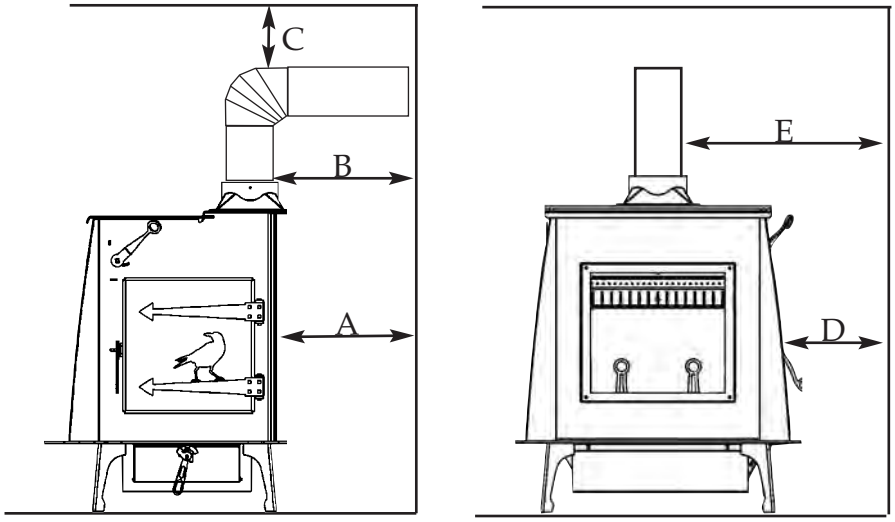

NO HEAT SHIELD

A. Back of stove to wall = 14″
B. Back of pipe to wall = 15″
C. Above pipe to ceiling = 18″
D. Side of stove to wall = 19″
E. Side of pipe to wall = 29.5″

WITH REAR HEAT SHIELD & PIPE SHIELD ATTACHED

A. Back of stove shield to wall = 6″
B. Back of pipe shield to wall = 6″
C. Above pipe to ceiling = 18″
D. Side of stove to wall = 19″
E. Side of pipe to wall = 29.5″

2) Parallel Installation, Single Wall Pipe, Back Vent

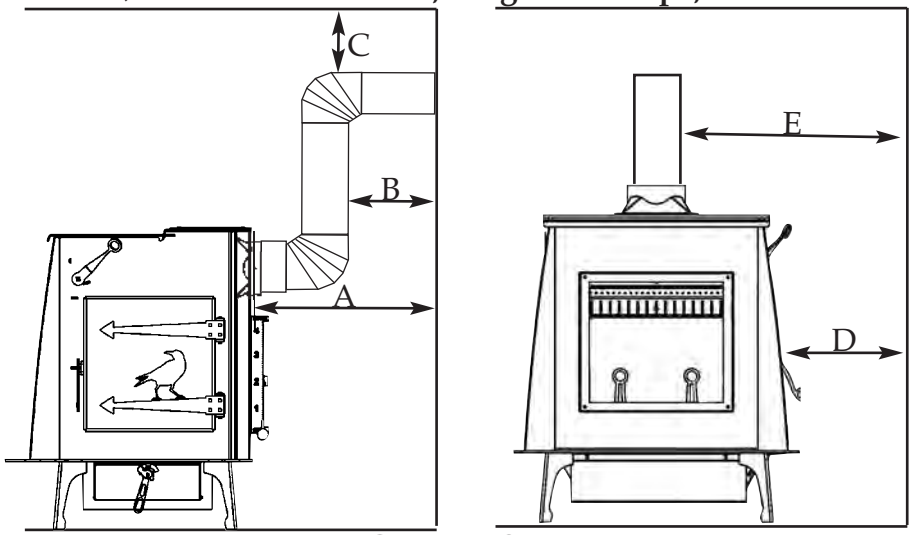

NO HEAT SHIELD

A. Back of stove to wall = 23″
B. Back of pipe to wall = 15″
C. Above pipe to ceiling = 18″
D. Side of stove to wall = 19″
E. Side of pipe to wall = 29.5″

WITH REAR SHIELD & PIPE SHIELD ATTACHED

A. Back of stove shield to wall = 14″
B. Back of pipe shield to wall = 6″
C. Above pipe to ceiling = 18″
D. Side of stove to wall = 19″
E. Side of pipe to wall = 29.5″

CLEARANCE INSTALLATION DIAGRAMS

3) Corner Installation, Single Wall Pipe, Top Vent

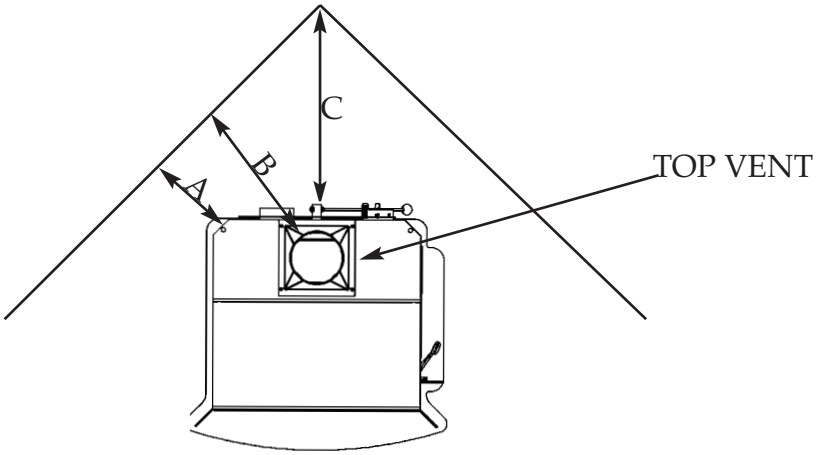

NO HEAT SHIELD

A. Stove corners to side walls =6″ (determines placement)
B. Pipe to side walls =17″
C. Pipe to corner =17″

WITH REAR HEAT SHIELD & PIPE SHIELD ATTACHED

A. Stove corners to side walls = 6″ (determines placement)
B. Pipe to side walls = 17″
C. Pipe to corner =17″

4) Corner Installation, Single Wall Pipe, Back Vent

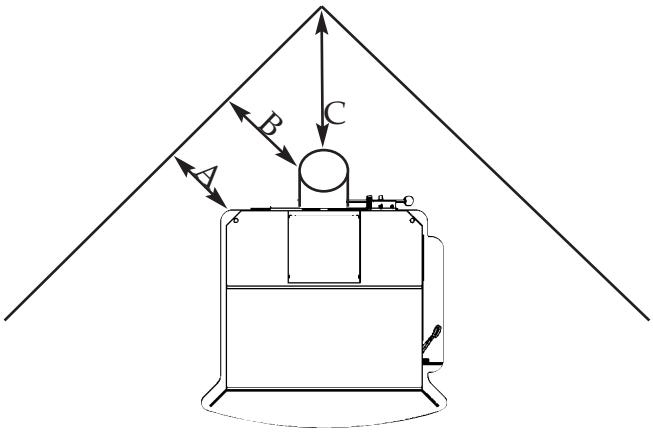

NO HEAT SHIELD

A. Stove corners to side walls = 10.5″
B. Pipe to side walls = 17″
C. Pipe to corner = 17″(determines placement)

WITH REAR SHIELD & DOUBLE WALL CONNECTOR PIPE

A. Stove corners to side walls = 6″ (determines placement)
B. Back of pipe shield to side walls = 6″ (Double Wall Connector Pipe)
C. Pipe to corner = 6″ (Double Wall Connector Pipe)

MOBILE HOME INSTALLATION

CAUTION: THE STRUCTURAL INTEGRITY OF THE MOBILE HOME FLOOR, WALL, AND CEILING/ROOF MUST BE MAINTAINED.

Because mobile homes are also referred to by HUD as "manufactured" homes, regulations present a gray area. Many "mobile" homes are set on a permanent foundation and connected to public utilities. If you are installing a stove in a mobile or manufactured home, check out the requirements above and check with your local code officials. More questions? Give us a call Monday through Saturday from 9 to 5 Eastern time at 1-800-866-4344.

While all stove installations have to meet National Fire Safety codes, mobile homes are given special consideration when it comes to installing a wood burning stove. These additional regulations were established by the Department of Housing and Urban Development (HUD), and result in the following additional requirements:

1. Double Wall Connector Pipe
2. Outside Air for Combustion
3. Tie Downs for the Stove
4. Spark Arrestor on the Chimney Cap
5. Stove Grounded to Chassis
6. Stoves May Not Be Installed in Mobile Home Bedrooms

Mobile Home Prohibition:
WARNING:
DO NOT INSTALL IN SLEEPING ROOM

Double wall pipe must be used to connect the stove to the chimney. This is stove pipe that is constructed with two walls, usually with the inner wall made of stainless steel. It reduces the required clearance to combustible building materials and furnishings.

Outside Air must be used for combustion. Because of the tight construction of mobile homes, wood stoves need a way to get adequate air for complete combustion from outside the home in order to avoid the risk of depleting oxygen in the living space. Having outside air for combustion is a requirement for all woodburning stoves in the state of Washington and is recommended for woodstoves in "super tight" new construction.

Tie Downs: The stove must be attached to the floor. This is to prevent tipping in the event the home is moved. (We can provide tie downs for our stoves at no extra charge).

Spark Arrestor: The chimney cap must have a spark arrestor screen. These are available with most prefabricated chimney systems.

Grounding: The stove should be grounded to the home chassis.

Not allowed in mobile home bedrooms: wood stoves are not permitted for installation in bedrooms in mobile homes.

The Outside Air Adapter is built into the design of the Absolute Steel Hybrid, and is located at the back of the stove. It has a four-inch collar which allows you to attach a four inch pipe, usually flexible dryer duct, from the stove to the outside. For long runs, the flexible pipe can transition to PVC or aluminum pipe, if you wish.

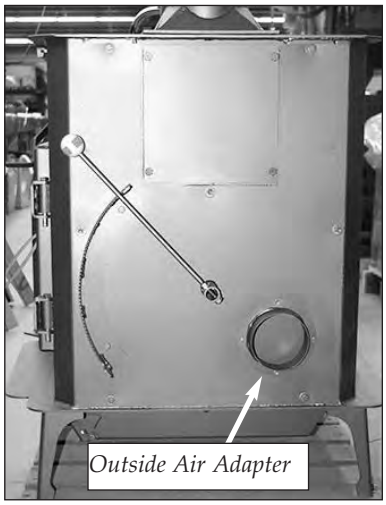

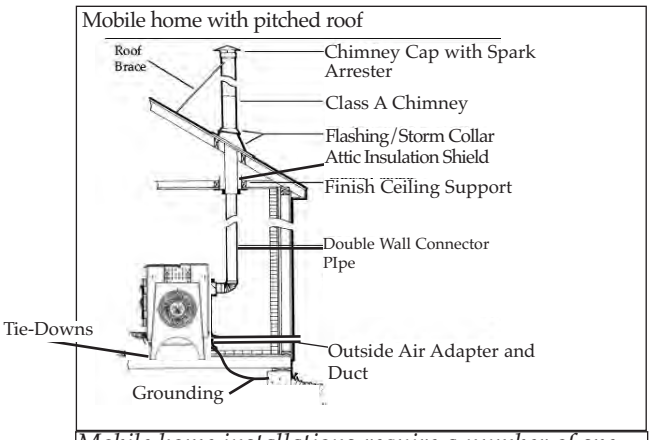

Mobile home installations require a number of special considerations, including dedicated outside air, tie-downs, and grounding to the chassis of the mobile home.

Woodstock Soapstone Company
66Airpark Road, West Lebanon, NH 03784
800-866-4344 • www.woodstove.com

SETTING UP YOUR STOVE

Your Model 211 Absolute Steel Hybrid woodstove has been shipped assembled except for two parts:
1)The flue collar/cover plate, **2)** Air Control Handle?
All necessary hardware and instructions are also packed in the firebox. Any optional items such as heat shields will be packed separately.

1) How to attach the Absolute Steel Hybrid flue collar & cover plate:

The Absolute Steel Hybrid is designed to be vented out the top or out the rear with an easily convertible flue collar and cover plate. Each part is secure to the stove body with 4 bolts. You will need a ½" wrench or socket and ratchet to install these parts. The stove is shipped with the cover plate installed over the rear flue exit. The flue collar is packed inside the firebox.

1. Decide which way you would like to vent your stove. This may be dependent on the location of an existing chimney or the design of an existing hearth. Always pay close attention to required clearances when considering stove placement

2. Install the flue collar in the desired location. Be sure that the gasket on it is secure and stays in place while installing. Use four of the bolts to attach the flue collar to the stove body. The holes in the stove body are threaded to accept the bolts. Alternate between the bolts while tightening to ensure even pressure. The bolts should be tight enough to firmly compress the gasket. Do not over tighten.

3. Repeat the process to install the cover plate over the flue exit not being used.

Image above shows a top mounted flue collar and rear cover plate

3) How to attach the Absolute Steel Hybrid Door Handle:

For shipping purposes the door handle for your Ideal Steel stove has been packed in the firebox with the appropriate hardware for installation. You will need a ½" socket and ratchet or wrench to install the handle.

1. Place the bolt through the hole in the handle. The pin in the handle will line up with a slot in the door. Slide the spacer over the bolt so that it is between the handle and the door.
2. The lock nut provided will fit into a cut out on the back of the door. Hold the lock nut in place and thread the bolt into it. Be sure the pin in the handle is aligned with the slot in the door..
3. Tighten the bolt until you feel some resistance when the handle travels up and down.

MAINTENANCE

Stove Cleaning

The steel body of your Absolute Steel Hybrid stove is painted with high temperature stove paint. Under normal operating conditions, this paint will not peel or blister. We suggest cleaning by dusting with a soft brush or cloth, or vacuuming with a brush attachment when the stove is cold. If the steel is exposed to moisture for a long period of time it may develop surface rust. If this happens, brush the affected area until clean with either a short wire brush or medium steel wool and then touch-up with high temperature stove paint, which is available from Woodstock Soapstone Company.

The soapstone or firebrick that lines the firebox interior is rugged and well suited to the harsh environment of the firebox. It should last for years under normal use. Should you need a replacement soapstone or firebrick part, contact Woodstock Soapstone Company directly.

Glass Cleaning

We use ceramic glass in our stoves because it is resistant to both impact and thermal shock. The panes of ceramic glass installed in the stove fronts have full gaskets around the perimeter so there is no contact between the glass and the steel frame.

There are two panes of glass at the front of the Absolute Steel Hybrid, with an air-space between the two panes. This "thermalpane" arrangement helps to maintain a higher temperature on the inside glass, which helps prevent condensation and soot from accumulating. The Absolute Steel Hybrid has a large glass area with an "airwash" design in which the primary air supply washes over the front glass to assist in keeping the glass free of ash and soot.

For easy access to the glass for cleaning, simply remove the two andirons by lifting up.

The glass may soot up the *first* time you use the stove (from condensation already inside the stove). *Don't be alarmed!* Usually, as soon as you build up adequate temperature with a hot fire, the glass will clean itself. The residue will burn off, and it will stay clean. Soot accumulation on the inside of the glass is more likely in the spring and fall, when temperatures are very mild and you are less likely to maintain a hot fire.

To clean the inside of the glass or wipe off fly ash, we recommend that you use a brush with soft bristles (like a paintbrush). A white vinegar and water solution works well to remove most ash or soot accumulation. You may clean heavy soot from the glass with very fine steel wool (0000 grade), but first, be sure the fire is out; and second, be sure that the glass has cooled to room temperature before you clean it. Once the glass is cool, you can lift out the two andirons to give you easier access to the glass. Once the glass is clean simply reinstall the andirons. DO NOT ATTEMPT TO CLEAN HOT GLASS.

Insert the andirons back into the stove after cleaning the glass. The andirons help keep wood away from the glass and the air wash system unobstructed.

Gasket Replacement

There are 5 places on your stove where you should check the gasket routinely: **(1)** on the loading door, **(2)** under the steel lid/cooktop, **(3)** under the catalytic bypass damper, **(4)** under the catalytic combustor, and **(5)** the ashpan door (models purchased with the ashpan). These gaskets are most important for maintaining high efficiency and clean burning. Close a slip of paper in these gasketed areas. There should be resistance as you pull the paper out. If there is any evidence of deterioration and/or leaking in any of these areas or if any of the gasket material in the stove becomes worn or frayed, it should be replaced. Please contact Woodstock Soapstone Company for replacement gasket and instructions. The sizes of all the gaskets on your Absolute Steel Hybrid woodstove are included in the parts list on page 36 of this manual.

Routine Checks And End of Season Maintenance

Every few weeks of operation we recommend checking the chimney connector (stovepipe) and combustor (see combustor section) and cleaning, if necessary. The connector pipe and chimney should be inspected every two months at a minimum and cleaned if necessary.

When the weather warms up and the burning season is over, it is a good idea to do a thorough spring cleaning and inspection of your stove and chimney system. We recommend an annual inspection and cleaning by a certified chimney sweep who has the tools and knowledge to inspect the whole system, from top to bottom. Chimney safety is an important part of responsible wood burning . The best way to gain confidence in the safety of your Ideal Steel Hybrid woodstove is to have it serviced and inspected once a year by a professional chimney sweep. The Chimney Safety Institute of America maintains a database of certified sweeps nationwide, visit their website www.csia.org to find a professional in your area.

If you live in a climate with warm, humid summer weather, your stove may collect moisture from warm, moist, chimney downdrafts during the summer. If this happens, you may get smoky smells in your home. One way to reduce the likelihood of this happening is to block the flue exit in the stove with fiberglass insulation at the end of the heating season. This will help prevent downdrafts and humidity from entering the stove. (You'll have to be careful to remember to remove the insulation before you light the stove again in the fall!). Some prefer to place a tray of kitty litter or baking soda in the firebox to reduce moisture and odors.

Creosote Formation and Need for Removal

When wood is burned too slowly, it produces tar and other organic vapors, which combine with expelled moisture to form creosote. The creosote vapors condense in the relatively cool chimney flue of a slow burning fire. As a result, creosote residue accumulates on the flue lining. When ignited, this creosote makes an extremely hot and dangerous fire.

The chimney connector and chimney should be inspected at least once every two months during the heating season to determine if creosote buildup has occurred. If creosote has accumulated it should be removed to reduce the risk of a chimney fire. Cleaning the combustor regularly will also greatly reduce creosote buildup. Under certain conditions, creosote can form rapidly.

The most likely conditions for creosote to occur are: (1) when filling the firebox with a hot bed of coals and the damper is then completely closed; (2) extremely long, smoldering fires, and; (3) burning wet or green wood.

Lack of combustion air and smoldering fires usually result in dense smoke and low stack temperatures in the chimney connector and the chimney. Wet or green wood can also produce dense smoke and excessive water vapor, which can quickly lead to creosote buildup.

Creosote will accumulate faster in exterior chimneys than interior chimneys because of colder outside temperatures.

There are three stages of creosote build-up. The first is a flaky, crystal like accumulation which can be removed with a brush. The second is a tar like coating. The third is a hard, glossy enamel like coating that is difficult to penetrate. If your chimney is heavily coated with tar or enamel like creosote, we recommend that you consult with an experienced chimney sweep about removal and prevention.

CREOSOTE PREVENTION: Without question, the best way to treat creosote is to prevent its accumulation. In order to reduce the danger of accumulation, we recommend the following:

1. Only burn properly dried firewood. Dry wood burns hotter, cleaner, and expels less moisture to condense.

2. Use the catalytic combustor properly. It can reduce possible creosote accumulation by as much as 90% and improve stove efficiency at the same time. Be sure to read the section on catalytic combustors on pages 19-21.

3. Never operate your stove for extended periods of time with the draft control completely closed. Both the wood fire and the catalytic combustor need oxygen to burn efficiently.

4. Restablish a hot fire, and reignite the combustor after every reloading by opening the primary air control for about 10 minutes.

5. Check the catalytic combustor output. Use the thermometer provided with the stove to be sure that the catalytic combustor is igniting properly when you kindle a fire or reload the stove. The temperatures on the stove top should rise noticeably when the catalytic combustor is engaged.

6. Avoid long, <u>smoldering</u> fires. Again, the catalytic combustor is critical here. Hot firebox temperatures (with the stove top thermometer in the 400-600ºF range) will produce more complete combustion and maintain proper catalytic activity.

OPERATION

Seasoning Your Stove

Both soapstone and steel need to be seasoned. The seasoning can be accomplished through a series of small to moderate fires. Your Woodstock Soapstone Stove is an easy stove to season, because even a small fire will provide hours of radiant heat once the stove is warm. **There are two things you will notice during the first fire**:

First, there will be a hot, acrid smell as the stove heats up. This smell is a result of the paint on the stove and pipe curing. You will want to have your first fire on a day when you can open the windows in the house to provide adequate ventilation. The odor is non-toxic and will only be present for the first few fires.

Second, there will be some condensation on the glass. This condensation is a result of any moisture being driven out of the stove and condensing on the inner surface of the glass. It takes a couple of small fires to season the stove and remove this excess moisture.

Starting a Fire And Establishing Proper Draft

1. Open the catalytic bypass. The bypass lever is located above loading door either on the right or left side of the stove. Lift the bypass lever up until it stops to bypass the catalytic combustor. The bypass must be opened before opening the load door.

2. Open the combustion air damper by lifting the knobed handle up to the 4 position. The air damper is located at the rear of the stove (same side as the loading door). Push the handle slighly away from the stove and move the lever up, this allows maximum air is into the firebox.

3. **Always confirm there is adequate draft before lighting the fire.** Hold a lit match or light a small piece of newspaper in the top/front of the firebox, where smoke exits. If the flame is drawn out of the firebox, toward the flue, proceed with lighting the fire. If the flame stands still or is pushed away from the flue exit, you must establish a good draft before lighting a fire. A hair dryer or heat gun pointed at the flue exit is a good way to establish draft without creating a lot of smoke. After you think you have draft, re-test with a match.

4. Once good draft has been established, build a fire on the floor of the firebox. **DO NOT USE ADDITIONAL GRATES, ANDIRONS OR ANY OTHER METHODS TO SUPPORT THE FUEL IN THE FIREBOX**. Start with crumpled newspaper and dry kindling.

5. Add small splits of firewood once the kindling has ignited. This will establish a bed of hot coals.

6. Add small to medium splits onto the hot coals. Assuming the wood is dry, the fire should spread through the wood. After about 10 minutes, close the air damper down between around the 3 mark.

7. After the single wall pipe temperature reaches 250°-300°F, close the bypass by lowering the handle down to the closed position. All of the smoke from the firebox will now pass through the catalytic combustor. The combustor will generate a substantial amount of heat as it "burns" the smoke passing through it.

8. Adjust the air control damper to a lower setting, the best burn setting is around the 1 mark. Push the air damper handle gently away from the stove and and push it down to a lower air setting. The closer the lever is to the bottom of the stove, the lower the burn rate, as less air is entering the firebox. The final damper setting will be determined by the desired heat output from the stove, the condition of the wood being burned, and the draft through the chimney system.

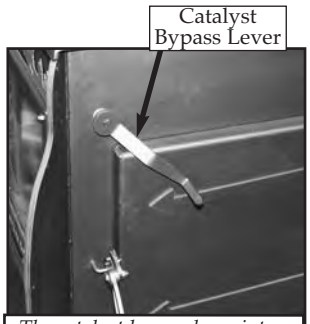

The catalyst bypass lever interlocks with the side load door

The amount of combustion air available in the firebox is controlled by the damper lever.

Check draft and preheat the chimney if necessary

Engaging the Catalytic Combustor

The catalytic combustor will start to burn the gases and particles in the smoke when the temperature of the smoke reaches approximately 500ºF (internally), or after about 5-15 minutes of establishing a strong fire. Each stove comes with a magnetic thermometer. Use the thermometer to monitor your stove/pipe temperatures. The temperature of the single wall pipe is approximately 1/2 the temperature of the exhausting smoke, so when the thermometer on the stove pipe reads 250ºF, it is approximately 500ºF inside. You will find that after the combustor is engaged, temperatures will often stabilize or lower on the pipe - evidence that the heat isn't getting lost up the chimney!

Engage the combustor by lowering the bypass handle (above the loading door) down until it closes completely. Then reduce the air damper setting to achieve the desired burn rate. Make fine adjustments to your air control damper by moving it slightly up or down. You may find that you can achieve the longest burn when the damper is only slightly open. In the Absolute Steel Hybrid, allowance is made for a small amount of primary and secondary air to enter the stove even when the damper is fully closed, and the stainless steel catalyst will work efficiently at low to moderate firing rates, thus preventing creosote formation or excessive smoke from your chimney.

CAUTION

NEVER USE GASOLINE, GASOLINE TYPE LANTERN FUEL, KEROSENE, CHARCOAL LIGHTER FLUID OR SIMILAR LIQUIDS TO START OR "FRESHEN UP" A FIRE IN THIS STOVE. KEEP ALL SUCH LIQUIDS WELL AWAY FROM THE STOVE WHILE IT IS IN USE.

Low & Overnight Burning

These instructions are intended as a guide to operating your wood stove. Your timing and final damper settings will vary depending on chimney draft, type of wood, moisture content of the wood and size of the splits. The Absolute Steel Hybrid is simply designed and intended to be user friendly, but it will take some practice to understand how the stove works best for you.

Bypass lever should be up when starting or reloading the Absolute Steel. Allowing the smoke to heat up to 500° F

The bypass lever interlocks with the door when the combustor is engaged (bypass closed). This safety feature makes it impossible to open the loading door without opening the bypass.

1. Before you open the loading door, you must fully open the catalytic bypass and the air damper. Wait a minute or so, before opening the loading door slowly, for a strong draft to be established to prevent smoke from spilling back into the room.

2. Wearing stove gloves, open the loading door and stir up the hot coals. If necessary, excess ash should be removed before reloading the firebox. If your stove has the optional ash pan, simply rake the hot coals back and forth in the firebox to allow the loose ash to fall through the center grate into the ash pan. If your stove does not have an ash pan, push the hot coals to one side and shovel the loose ash into a non-combustible ash container with a tight fitting lid. Dispose of the ash properly.
NEVER PUT AN ASH CONTAINER ON A COMBUSTIBLE SURFACE, LIKE A WOOD FLOOR.

3. Place several small splits on top of the hot coals and allow them to ignite.

4. Load the firebox to capacity leaving roughly 2" of space for secondary combustion, with a mix of larger and smaller splits. Close the loading door.

5. Allow the temperature on the exterior of single wall pipe to come back up to 250°, this may only take 5-15 minutes depending on the dryness of the wood and draft conditions.

6. Adjust the air damper to a low setting, around the 1 position, by lowering the air damper handle down.

7. Close the catalytic bypass by lowering the lever until it stops.

8. Initially the fire may appear to die out. This may cause a small amount of soot to collect on the glass. Any buildup on the glass should go away with higher temperature burns.

NEVER BURN THE STOVE WITH THE AIR DAMPER FULLY OPEN EXCEPT WHEN KINDLING A FIRE OR RELOADING THE FIREBOX. NEVER BUILD A ROARING FIRE IN A COLD STOVE. IT TAKES AT LEAST 30 MINUTES TO HEAT THE INNER SOAPSTONE PANELS OF THE ABSOLUTE STEEL HYBRID. ATTEMPTS TO REACH HIGH TEMPERATURES VERY QUICKLY COULD RESULT IN DAMAGE TO THE STEEL OR SOAPSTONE PARTS.

Burning for Higher Heat Output

These instructions are intended as a guide to operating your wood stove. Your timing and final damper settings will vary depending on chimney draft, type of wood, moisture content of the wood and size of the splits. The Absolute Steel Hybrid is simply designed and intended to be user friendly, but it will take some practice to understand how the stove works best for you.

1. Before you open the loading door, you must fully open the catalytic bypass and the air damper. Wait a minute or so to establish a strong draft. This will help to keep smoke from spilling into the room.

2. Open the load door and and stir up the coals and remove excess ash as needed.

3. Place several small splits on top of the hot coals and allow them to ignite.

4. Load the firebox to capacity leaving about a 2"space for secondary combustion at the top, with a mix of larger and smaller splits. Close the loading door.

5. Allow the fresh wood to become involved in the fire. With dry wood this may take 5-15 minutes, or until the exterior of single wall pipe reaches 250°. Lower air damper handle down to the ? positon.

6. Close the catalytic bypass by lowering the lever until it stops.

7. You should see the flames from secondary combustion at the top of the firebox becoming more active. Adjust the air damper to approximately the 1 position.

Ash Removal

NEVER BURN THE STOVE WITH THE ASH DOOR OPEN!

Without an ash pan:

If your Absolute Steel Hybrid does not have an ash pan you will have to remove ash through the side loading door, approximately every 5-7 days if the stove is in continuous operation. You do not have to let the fire die out completely to remove the ashes, but the fire must be reduced to hot coals. First make sure that both the catalytic bypass damper and the air control damper are open. This will increase the draft and prevent smoke from entering the room.

Open the side loading door and move the hot coals to one side or the back of the firebox. Scoop out the ashes that were underneath the coals, place them into a metal container with a tight fitting lid and then reverse the procedure. Leave some ash and hot coals in the bottom of the stove to help rekindle a fire.

The ash Pan door is located at the front of the stove, below the ash lip.

With an ash pan:

If your Absolute Steel Hybrid is in continuous operation, you will probably need to empty the ash pan every 7-10 days. You do not have to let the fire die out completely, but make sure that it is reduced to hot coals. Open the catalytic bypass damper, and open the air control damper. Remember to wear stove gloves - the ash pan will be hot! Open the ash pan door located on the same side as, and below the loading door. Carefully slide the lid into place on the top of the ash pan and remove the ash pan from the base of the stove. The lid slides over the long top edges of the ash pan. Close the ash pan door before emptying the ashes into an appropriate container.

The ash pan door drops down and the ash pan slides out from under the stove for easy ash removal.

Do not open the ash removal door while the stove is in the middle of a long burn, because the additional draft created under the fire could cause the stove to burn excessively hot and the ash pan itself will be very hot, and full of live coals. If you are burning your stove 24 hours/day, it is often easiest to empty the ashes first thing in the morning, after an overnight burn.

ASHES SHOULD BE EMPTIED INTO A METAL CONTAINER WITH A TIGHT FITTING LID. THE CLOSED CONTAINER OF ASHES SHOULD BE PLACED ON A NONCOMBUSTIBLE FLOOR OR ON THE GROUND, WELL AWAY FROM ALL COMBUSTIBLE MATERIALS, PENDING FINAL DISPOSAL. IF THE ASHES ARE DISPOSED OF BY BURIAL IN SOIL OR OTHERWISE LOCALLY DISPERSED, THEY SHOULD BE RETAINED IN THE CLOSED CONTAINER UNTIL ALL CINDERS HAVE THOROUGHLY COOLED. LIVE CINDERS CAN TAKE 36 HOURS OR LONGER TO COOL.

NEVER SHOVEL ASHES INTO A COMBUSTIBLE CONTAINER LIKE A CARDBOARD BOX OR A PLASTIC BUCKET. DO NOT USE A VACUUM CLEANER TO REMOVE ASHES UNLESS IT IS SPECIFICALLY DESIGNED FOR WOODSTOVE ASH REMOVAL. NEVER LEAVE A CONTAINER OF HOT ASHES ON A WOOD FLOOR, PORCH, OR ANY COMBUSTIBLE SURFACE.

The Pipe Thermometer

We recommend placing the thermometer 8”-10”above the flue collar on **single wall** stove pipe if the stove is vented out the top. If the stove is rear vented, the surface thermometer should be placed on the steel plate toward the back of the stove.

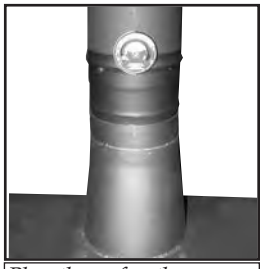

Place the surface thermometer 8” above the stove top for top vent, or on the cover plate for rear vent.

If you are reading the single wall stove pipe temperature, the interior flue exhaust temperature is about twice as hot. Since the 22 gauge sheet metal pipe is more reactive (faster heat transfer) than the stove top, you will find you can engage the combustor sooner. We recommend engaging your catalytic combustor once the pipe thermometer reaches 250° F.

Once the combustor is engaged, you should see the stove surface temperature rise and the pipe temperature stabilize, then drop, indicating catalytic combustor activity. From a cold start it may take about 30 minutes to get the stove up to temperature. If you are reloading a hot stove, wait approximately 5-15 minutes before engaging the combustor. The thermometer is not a precise instrument – it will not tell you the exact temperature inside the firebox or in the flue.

Overfiring

Burning a stove frequently at excessive temperatures is known as overfiring. When the surface temperature is consistently over 700º F, the stove has reached 1400º F inside. Operation with temperatures in this range can lead to metal warping, becoming brittle, and eventually deteriorating completely. It can shorten the useful life of the catalytic combustor.

DO NOT OVERFIRE THIS WOOD STOVE!

ATTEMPTS TO ACHIEVE HEAT OUTPUT RATES THAT EXCEED STOVE DESIGN SPECIFICATIONS CAN RESULT IN PERMANENT DAMAGE TO THE STOVE AND TO THE CATALYTIC COMBUSTOR.

Avoid overfiring by letting the combustor and secondaries do most of the work in the stove. Your stove is operating at peak efficiency when the combustor is “engaged”and the secondaries are ignited, with the damper lever set to a low to moderate setting, and the logs are glowing with secondary flames apparent. You will get the greatest amount of heat per pound of wood when the stove is operated in this manner.

Daily Use

Your Absolute Steel Hybrid stove is well suited for continuous firing on a 24 hour a day basis. It will burn for hours on one load of wood, and will provide steady, even, heat for hours after the fire dies down. You need only disengage the catalytic combustor when you kindle a fire, or reload the stove. Once the catalyst is ignited, it will continue to function as long as there is smoke to burn.

Your connector pipe and chimney, or chimney pipe, should be inspected at regular intervals (not less than once every two months). Examine the connector pipe for creosote, corrosion, loose seams, or excessive soot. Clean and replace as necessary. The chimney or chimney pipe should be cleaned and checked by a certified specialist once a year. A small mirror held at the cleanout door of a masonry chimney will be helpful. For a Class A prefabricated metal pipe, some disassembly is usually required.

The Cook Top

The top lid of the Absolute Steel Hybrid wood stove consists of a decorative metal plate. The lid has been designed to enhance the beauty and versatility of your stove. The steel cook top is not designed as a cooking surface and food should always be placed in a heavy duty Dutch oven or skillet, not directly onto the steel surface.

The top plate comes in several styles and can be used as a trivet for cooking.

The Fall-Away Tool

The “fall-away tool”, which comes with your stove, can be used to operate the door latch and the bypass lever. Simply insert the tool into the door handle circle to use to safely open/close the loading door. The loading door and the door handle are very hot, so use the tool provided. The “fall-away tool” conforms to UL requirements and is made so that if you let go of it, it will “fall-away” from the stove and not become too hot to handle.

Firewood

Your Woodstock Soapstone Absolute Steel Hybrid Wood Stove is designed to burn dry, natural cordwood. Higher efficiency and lower emissions generally result when burning air dried hardwoods, as compared to green, freshly cut hard woods. It is perfectly fine to burn soft woods in your stove as long as they are properly dried. Hardwoods are preferable because they are typically denser than soft woods which gives them a higher fuel value per volume.

The moisture content of some trees may range as high as 50% – i.e., there is as much moisture in the tree as there is wood. After wood has been cut to length, split and stacked for a year, the moisture content will usually range from 15-25%. Splitting wood before it is stored will reduce drying time. Properly dried wood will produce more heat, reduce the likelihood of water vapor condensing in the chimney, forming creosote, and result in less pollution entering the air. It is safer and more efficient to burn dry hardwood than green or wet wood that smolders.

The advantages of burning dry wood are many. Dry wood is lighter, easier to split, and easier to carry. It is easier to light, produces more heat, and generates less pollution. If you burn wet wood much of the energy generated by the fire is used to drive moisture out of the wood, rather than producing heat for you. Dry wood will maintain the highest combustor temperatures and burn the most efficiently. Creosote is much less likely to form if you burn dry wood.

There are several ways to determine if wood is properly dried. Visual "checking" on the end of the wood splits, dry wood will feel lighter, if you bang two pieces of dry wood together it will sound hollow (wet wood will sound solid & dull) no bubbling or sizzling from the wood as it burns. Moisture meters are a great way to determine the percentage of moisture content in wood. Moisture meters utilize two pin probes that insert into the wood and read the percentage of moisture. Moisture meters can be purchased online.

Dry Firewood will show "checking" or cracks at the end of the split

Common symptoms of burning wet wood include: Difficulty getting the fire started, smokey fire, dirty glass, creosote buildup within the stove pipe and/or chimney, low heat output, short burn times, and excessive wood use.

DO NOT BURN pressure treated or painted wood, unseasoned wood, coal, garbage, solvents, lawn clippings or yard waste, materials containing rubber; including tires, plastics, petroleum products, paints, paint thinners, asphalt products, materials containing asbestos, construction debris, railroad ties, manure or animal remains, salt water driftwood or other salt treated saturated materials, or paper products, cardboard, plywood, or particle board in your Woodstock Soapstone Absolute Steel Hybrid Wood Stove. The prohibition against burning these materials does not prohibit the use of fire starters made from paper, cardboard, saw dust, wax and similar substances for the purpose of starting a fire in the Absolute Steel Hybrid.

Coal and artificial logs burn much hotter than wood and could cause damage through overheating the the steel or the soapstone panels. Burning treated wood, garbage, solvents, colored paper or trash may result in the release of toxic fumes and may poison or otherwise render the catalytic combustor ineffective and cause smoke.

Burning cardboard, loose paper, and trash will add significantly to ash and soot buildup, and it will not produce much heat. Fly ash from improper fuel can also coat or plug the combustor, causing smoke spillage into the room. Under normal operating conditions, the Woodstock Soapstone Stove is designed to last for generations. It is not, however, designed for continuous over-firing, or firing with coal, artificial logs or trash.

DO NOT BURN!

- UNSEASONED WOOD
- TREATED/PAINTED WOOD
- COAL
- GARBAGE
- CARDBOARD
- SOLVENTS
- COLORED PAPER
- TRASH
- LAWN CLIPPING
- RUBBER PRODUCTS
- PLASTICS
- PETROLEUM PRODUCTS
- PAINT/PAINT THINNER
- MATERIALS CONTAINING ASBESTOS
- DRIFTWOOD
- ASPHALT PRODUCTS
- RAILROAD TIES
- MANURE/ANIMAL REMAINS
- PLYWOOD/PARTICALE BOARD

SAFETY

Overview

To gain maximum enjoyment and benefit from your stove, you must have a safe installation. Adhere to all guidelines found in this manual. All local and national building codes need to be followed. Having a certified installer perform all connections to an inspected chimney system is strongly advised. If you choose to perform any or all of this work yourself, it must be inspected by either a Certified Wood Stove Specialist or a Certified Chimney Specialist.

You will often find the local Fire Department to be very knowledgeable. They may inspect your house for proper warning devices, fire extinquishers, and evacuation routes. Keep their phone number handy. Although many communities utilize Fire Department personnel for woodstove installation inspections, they are not usually trained as combustion venting specialists. Generally, you are best advised to use a certified specialist. The sense of security that comes with a properly installed and maintained system is worth far more than its cost.

Installation

Your Woodstock Soapstone Co. Stove has been thoroughly tested and listed to UL #1482 by an independent testing laboratory. UL #1482 is the standard for testing solid fuel appliances and is universally recognized by all national building regulatory agencies, (SBCC, BOCA, ICBO) and individual states. Your woodstove is a safe product, but it must be installed in accordance with the instructions in this manual. Woodstoves themselves rarely cause fires, but improper installation or careless operation are often to blame.

Follow the guidelines in the Installation chapter of this manual with regard to:

- Proper chimney and connector pipe
- Clearances to combustible surfaces and objects
- Floor protection

Smoke and the Chimney

According to www.woodheat.org, “The chimney is the engine that drives a wood heat system”. To have a safe system you must have:

- The correct type of chimney
- The correct size of chimney
- Correct location inside the house
- A properly installed system

Smoke spilling into the living space when starting a fire is an inconvenience. Smoke spilling into the house when you are away or asleep can be a major problem. In order to have all the smoke go up the chimney all the time, the chimney must have positive draft. Ideally, this draft is between 10-18 pascals, or .04-.07 inches water column, a pressure measurement, when there is no fire in the stove. A certified installer can perform a simple draft test for this.

Hot Surfaces

Your stove is HOT to the touch! Utilizing the “helping hand” and use of heat resistant or insulated stove gloves can prevent serious burns when opening or closing the door, ash pan, or lid of your stove.

Ash removal

Convenient and safe ash removal is a necessity for trouble free wood burning. An ash removal container should have:

- A comfortably large capacity
- Good stability
- A top that closes securely and will not fall off
- Legs or other means of preventing downward heat flow
- A design that prevents spilling when loading

Ashes should never be dumped into a combustible container, such as a cardboard box, and an ash container should never be set on a combustible surface. Hot embers in the ashes can often stay viable for 36 hours or longer after removal from your stove.

Precautions

• **Smoke detectors:** A smoke detector is inexpensive insurance and is required by most localities. They can either work on batteries, or can be hard-wired into your electrical system. If you have battery operated detectors, it is a good idea to replace batteries on an annual basis (i.e.: every New Year's day, or 4th of July, etc). They will sound an audible alarm in the event of the presence of smoke. Smoke will almost always precede a wood fueled fire.

• **Fire Extinguisher:** If you burn wood, you should have at least one ABC dry chemical extinguisher. The chemical extinguisher is preferable to water because the application of cold water to hot metal stove pipes can cause metal parts to buckle or crack, thereby releasing more fuel to the fire.

• **Carbon Monoxide Detector:** These operate in a manner similar to smoke detectors but are usually user calibrated and record minute quantities on a digital readout before sounding an audible alarm. The chances of carbon monoxide being created and escaping from your properly installed and operated stove are miniscule. You may have other vented appliances in your home that could be potential problems. The investment in a high quality carbon monoxide detector is well worth its cost in the peace of mind it affords.

• **Chimney inspection:** Your connector pipe and chimney, or chimney pipe, should be inspected at regular intervals. Examine the connector pipe for creosote, corrosion, loose seams, or excessive soot. Clean and replace as necessary. The chimney, or chimney pipe, should be cleaned and checked by a certified specialist once a year. A small mirror held at the cleanout door of a masonry chimney will be helpful. For a Class A prefabricated metal pipe, some disassembly is usually required.

Emergency Procedures In The Event of a Chimney Fire:

If you have a chimney fire or runaway fire, follow these safety precautions:

1. Close the draft damper immediately, with a slow and even motion. This cuts off the supply of oxygen to the stove.

2. Call the fire department immediately.

3. Get everyone out of the house. One adult should stay in the house to check for sparks and signs of fire. Those outside should watch the roof for signs of fire.

4. If there is a danger of a fire, discharge the fire extinguisher into the stove. Do not pour or spray water directly into the chimney as rapid contraction caused by the application of cold water could cause the tile liner in the chimney to crack.

5. After the fire is out, check the stove, chimney connector and chimney carefully for signs of damage. The entire system should be thoroughly inspected by a certified chimney professional.

Note: Chimney fires must be put out from the bottom. The entire system must be air tight to suffocate a fire; hence the importance of having a tight cover on the chimney cleanout and not venting two appliances into a single flue.

The length of time it takes to bring a chimney fire under control depends on the amount of fuel in the stove, the rate at which it is burning and the amount of oxygen available to it. The faster it is brought under control the less severe any damage is likely to be.

TROUBLESHOOTING GUIDE

Problem	Possible Cause	Solutions
Stove smokes	Operating technique	Open bypass and air damper prior to reloading stove
	Cold start	Check and establish a chimney draft prior to lighting the stove. If you have neutral or a down draft, preheat the chimney with a hairdryer, heat gun, or twists of lit newspaper.
	Blocked Chimney	Examine chimney and stovepipe for blockage and creosote accumulations. Check spark arrestor screen on your cap, if you have one.
	Blocked outside airduct	Check the outside inlet for blockage caused by snow, debris, or insects.
	Oversized chimney	Reline chimney to appropriate size.
	Chimney too short	Add height (industry standard is 15ft or more).
	More than one appliance vented into flue	Disconnect other appliances, seal openings appropriately.
Back Puffing or sudden internal ignitions	Operating technique	Open bypass and air dampers before opening to reload and keep it open a few minutes after reloading.
	Burn rate too low	Open air damper to allow for hotter burn.
	Chimney down draft	In high wind areas, a specially designed wind cap may be necessary.
	Combustor is plugged	Clean combustor of accumulated fly ash.
	Tight house	Dedicated air supply with outside air adapter attachment to stove.
Combustor not glowing	Late stage of burn	Combustor does not need to be glowing to be working. Check smoke exiting chimney to help determine if combustor is working properly.
Stove burning too hot or fast	Ashpan Door is Open	Close ash door securely, check ash door gasket for tight seal.
	Excessive draft	Adjust air damper to lower setting;a pipe damper may be necessary.
	Extra tall chimney	Consider installing pipe damper

Stove burning too hot or fast (cont.)	High wind or hilltop location	Install wind cap on top of chimney
Insufficient Heat	Poor quality or green wood	Use only dry wood (dried at least one year depending on wood species) Test with kiln dried wood.
	Blocked outside air duct	Check outside air duct for blockage
	Heat going up chimney	Test with thermometer on 1st section of stovepipe– temps should drop below 300 degrees F when combustor is engaged.
Acrid odor during initial burn	Paint and/or window gasket curing	Open windows until paint or gasket is cured.
Window Dirty	First start up fire	This is sometimes the result of condensation in a new stove, and should disappear after several hot fires.
	Airflow too restricted	Open the air damper in small increments until some slow flames appear. Run a hot fire to burn smoke off the glass, or remove build up with glass cleaner when stove is cold.
	Smoldering fire	Green or wet wood. Burn dry wood, or open air damper slightly for a hotter burn. (see above)

Is my Combustor still working?

Your catalytic combustor is viable for 12,000 to 14,000 burn hours. This translates, roughly, into a life span of 4 -6 years. If the catalytic coating is not working as it should, it is not burning the gas vapors in the smoke and therefore, the smoke exiting your chimney will be darker in color. If your draft is sluggish and you have ruled out any draft related issues in the venting or in the wood supply, your combustor may not be burning the smoke vapors and too much volume is trying to pass through the honeycomb at one time. If heat output is diminished, and any other factors are ruled out, that may also be a sign that the catalytic combustor is not burning the smoke vapors, therefore not extracting maximum heat from available BTUs in the wood you are burning.

THE CATALYTIC COMBUSTOR

Here is how your catalytic combustor works.

The catalytic combustor is a stainless steel honeycomb with hundreds of cells. If you looked at the inside of each cell with a microscope, you would see that the walls are uneven and filled with minute nooks and crannies. Precious metals, such as platinum, are sprayed on the inside of these cells to coat all of the nooks and crannies. This creates the largest possible surface area to interact with the wood smoke. The catalytic combustor in your stove is very similar to the one in the exhaust system of your automobile and works to achieve the same results - high efficiency and clean air!

Bypass lever should be up when starting or reloading the Absolute Steel. Allowing the smoke to heat up to 500° F

When you first start a fire, you should bypass your catalytic combustor and let the smoke go directly up the chimney. Once wood smoke reaches 500º F (about 10-15 minutes after restablishing a strong fire), it is hot enough to ignite the catalytic combustor. As the wood smoke passes through the cells in the combustor, the smoke reacts with the precious metals which line the inside of the honeycomb and both combustible gases and particles in the smoke ignite and burn. This "catalytic - burn" reduces emissions and also increases heat output from the stove.

The bypass lever interlocks with the door when the combustor is engaged (bypass closed). This safety feature makes it impossible to open the loading door without opening the bypass.

Without a catalytic combustor, between 5% - 40% of the chemical energy contained in wood simply escapes up the chimney when wood is burned. Energy laden gases are exhausted up the chimney where they pollute the air or may condense on the inside of the chimney flue as creosote. The slower the burn, without a catalytic combustor, the greater the amount of energy that is lost. A long smoldering fire is the least efficient use of energy in wood, yet it produces lots of smoke, which is the fuel supply for the catalytic combustor.

Most of the chemical compounds in wood smoke are combustible. The catalyst produces high temperatures, which loosen the bonds of these chemical compounds and "burns" wood smoke. A stove that "burns" these compounds and uses smoke as additional fuel will burn more efficiently and produce more heat, while reducing creosote and air pollution at the same time. However, most stoves cannot consistently produce temperatures high enough to burn cleanly, particularly during long burning times - hence the need for a catalytic combustor.

Your catalytic combustor can get the most efficiency out of every piece of wood if it has three things: temperature, turbulence, and time.

1. **Temperature.** The catalytic combustor can only start burning the gases in the wood smoke after the smoke has reached at least 500 degrees F. Before the smoke reaches that temperature, it simply is not hot enough to start the reaction at the combustor. This will result in an inefficient smoldering fire.
2. **Turbulence.** The wood smoke can interact best with the precious metals inside the honeycomb cells if there is some variation in the air flow. Increased turbulence enables more of the wood smoke to come into contact with more of the nooks and crannies in the honeycomb cells. The exhaust path as well as the irregular surface of the combuster cells adds needed turbulence.
3. **Time.** Once the temperature and turbulence are achieved, the catalytic combustor just needs to have enough time to burn all the gases in the wood smoke. For this reason, it is best to minimize the amount of air you allow into the firebox once the combustor is ignited. Allowing too much air into the firebox speeds up the rate at which the fire burns and allows more wood smoke to be consumed by the secondary combustion system . The ideal air setting for a long catalytic burn allows enough air to keep the wood burning and producing smoke.

With proper care, a new catalytic combustor will give years of fuel savings and lowered emissions. By following some simple guidelines you can ensure maximum combustor performance and longevity. Your catalytic combustor is designed to last for 12,000 -14,000 hours of use. You can ensure yourself of getting the maximum life from your combustor by following these simple guidelines:

1) Burn only natural, dry wood.

2) Wait until the exhaust gases reach about 500 degrees F when monitoring temperatures with an internal catalytic probe thermometer or flue probe thermometer, **or** 250° on single wall stove pipe, after restablishing a strong fire.

3) Bypass the combustor before reloading, and leave the bypass open for a few minutes after reloading, to raise the temperature in the stove.

4) Don't overfire the stove.

5) Clean the combustor regularly. See instructions below.
You can also obtain a lot of useful information by visiting our website (**www.woodstove.com**). Other very useful web sites on all aspects of wood burning are **(www.woodheat.org)** and **(www.csia.org)**. CSIA is the Chimney Safety Institute of America.

Inspection & Cleaning

Your stove comes with a new stainless steel combustor already installed. The stainless combustor is a honeycomb foil block located under the top lid of the Absolute Steel . Typical lifespan for a well maintained catalytic combustor is 4-6 years. There are a few ways to determine if your combustor needs to be cleaned. If you notice the smoke exiting your chimney is thicker and darker in color, the combustor may need cleaning. Additionally, if you notice reduced draft or backpuffing, or performance and heat output has diminished, then the combustor may not be working as efficiently as designed.

Plan to clean and visually inspect your catalytic combustor about every 4-6 weeks, or at least 3 times during the heating season. Any fly ash deposits on the combustor will need to be brushed or vacuumed off. An accumulation of fly ash can reduce the draft, causing backpuffing, sluggish burning and inefficient heating performance. You should clean and check your combustor before the heating season begins, as well as on a regular 4-6 week basis.

COMBUSTOR STANDARD CLEANING HOW TO:

Materials needed: (1) work gloves and safety glasses; **(2)** soft bristled paint brush or vacuum cleaner (preferably one designed for ash removal).

1. Be sure the fire is out and the stove is cold. If you are using a regular home vacuum, it is extremely important that no hot ashes or embers be sucked into it as this could result in damage to the vacuum or cause a serious fire. Open the top lid. The combustor is located under a heat deflector. To remove the heat deflector, tilt up the back of the shield and pull it forward.

2. Lift the combustor out of the stove. Brush or vacuum the combustor sure to remove all fly ash from the combustor. Inspect the gasket that the combustor housing rests against.

3. Return the combustor to the stove. Be sure that it is seated properly. Place the heat deflector over the combustor.

4. Close the top lid.

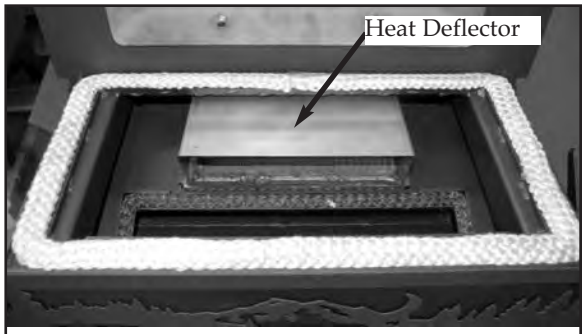

The heat shield helps deflect the heat generated by the catalytic combustor forward.

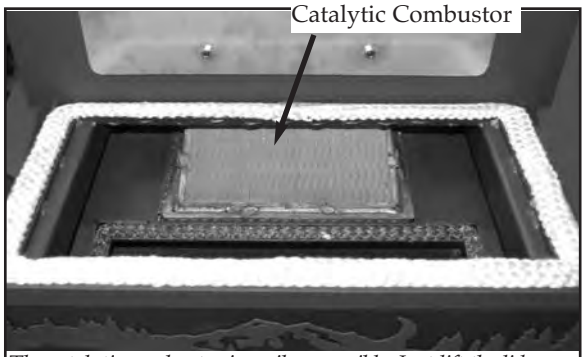

The catalytic combustor is easily accessible. Just lift the lid, remove the heat shield (shown above), and the catalyst is visible.

COMBUSTOR VINEGAR & WATER CLEANING HOW TO:

The vinegar & distilled water cleaning is recommended 1-2 times during the heating season. The vinegar is just acid enough to remove any ash within the cells of that may be masking the catalytic coating.

Materials needed: (1) work gloves and safety glasses; **(2)** spray bottle; **(3)** white vinegar; **(4)** distilled water.

1. Be sure the fire is out and the stove is cold. Open the top lid. The combustor is located under a heat deflector. To remove the heat deflector, tilt up the back of the shield and pull it forward.

2. Lift the combustor out of the stove. Place the combustor onto newspaper or an old towel. In the spray bottle prepare a 50/50 white vinegar & distilled water mixture.

3. Spray the 50/50 mixture through one side of the combustor and allow it to drain onto the newspaper. Flip the combustor over and spray through the other side and allow it to drain.

4. Rinse the combustor with 100% distilled water to remove any remaining vinegar, allow the combustor to dry before returning the combustor to the stove.

The catalyst can be removed by lifting it out of the stove.

5. Return the combustor to the stove. Be sure that it is seated properly. Place the heat deflector over the combustor.

6. Close the top lid.

Catalytic Combustor Replacement

If you feel that your catalytic combustor is not working properly, please contact Woodstock Soapstone Company at 1-800-866-4344 for instructions regarding return and replacement. Accessing the catalyst in your new Absolute Steel Hybrid Woodstove is simple. **1)** Lift the top stove lid, **2)** Remove the heat deflector (pictured on previous page), **3)** Lift the catalyst from the stove, **4)** Install the new combustor, **5)** Set the heat deflector over the combustor, and **6)** Close the top lid.

Frequently Asked Questions

Q. How does the catalytic combustor work?

A. The catalytic combustor breaks the bonds that hold the chemicals contained in wood smoke together. The result is that these chemicals begin to burn at temperatures of about 500 degrees F (the normal range of exhaust gas temperatures). Without the catalytic combustor, wood smoke would have to be brought up to a temperature of 1000 to 1200 degrees F in order to start to burn. A stove with a catalytic combustor will generate up to 25% more heat from each piece of wood, thus reducing the amount of fuel used during the year.

There are three advantages to burning the smoke created by burning wood. *First*, the smoke becomes another source of fuel, giving you more heat from the same amount of wood. *Second*, creosote causing materials will be burned up instead of being deposited in your chimney, reducing the risk of a chimney fire. *Third,* air pollution will be drastically reduced.

Q. How can I tell if the catalytic combustor is working or "worn out"?

A. *First* - The best way to tell if the catalytic combustor is working is by observing the smoke coming out of your chimney. If there is only a small amount of smoke, and/or it's white in color, the catalytic combustor is working. You will see significantly more smoke when the combustor is being bypassed than when the smoke is being burned by the combustor.

Second - One very noticeable effect of a well functioning combustor is the high efficiency of your stove. Catalytic combustors produce lots of heat, which the stove radiates into your home. If you notice that the stove is producing less heat, or that a load of wood doesn't provide as much warmth, under similar circumstances, as it did before, it's time to check the combustor. If and when the catalyst ceases to function properly, the stove will produce noticeably less heat.

Third - Regular inspection of the connector pipe and chimney flue should show very little accumulation of soot and creosote. Soot is typically brown and powdery when the combustor is working properly. Heavy buildup of black sticky creosote may indicate the combustor is not functioning or needs cleaning.

If you suspect that your catalyst is not working, let the stove cool down and clean the combustor and try it again.

Q. How do I maintain my catalytic combustor?

A. Combustors should be inspected and cleaned if necessary **every 4-6 weeks, or a minimum of 3 times** during the heating season. When the stove is cool, the combustor can be cleaned by thoroughly vacuuming or brushing both sides.

If the stove does not draft well when the catalytic combustor is engaged then the combustor cells themselves might be partially plugged with fly ash. If this is the case, follow the cleaning procedure described in detail on page 19 of this manual.

Q. Is it all right to burn my stove hot daily to clean any build up in my chimney system?

A. It is not necessary to burn your stove hot daily to burn off any creosote build up in the chimney. This function is performed by the catalytic combustor. It is there to reduce the emissions from the stove that contribute to deposits in the connector pipe and chimney flue.

View more frequently asked questions and articles at our web site **www.woodstove.com**. Other very useful websites

on all aspects of wood burning are **www.woodheat.org,** and **www.csia.org**. CSIA is the Chimney Safety Institute of America.

TWO OTHER IMPORTANT POINTS REGARDING CATALYTIC COMBUSTORS:

1) The combustor uses wood smoke as fuel. Most smoke is created in the early stages of the burn cycle. When a bed of coals is all that remains of your wood, there is little smoke left to fuel the combustor, and it will no longer create substantial amounts of heat. Hence, the temperatures on the surface thermometer tend to fall toward the end of the burn, even though the firebox is full of hot coals. This does not mean that you have to reload the stove or open the bypass. Let the hot coals burn down to ashes.

2) Since the combustor blocks the path of exiting smoke, it can reduce the draft in your stove. When draft is reduced by warm or rainy weather, open the bypass damper longer when starting the stove to create more draft.

CATALYTIC COMBUSTOR WARRANTY

The catalytic combustor in your Absolute Steel Hybrid Woodstove is fully warranted for three years from the date of purchase against any defect in workmanship or materials that prevent the combustor from functioning when installed and operated properly. The catalytic combustor is additionally warranted for three years from the date of purchase for any deterioration in the stainless steel substrate material. For instructions regarding return or replacement of the catalytic combustor, please contact:

Woodstock Soapstone Company, Inc.
66 Airpark Road
West Lebanon, NH 03784
Phone: 1-800-866-4344 • Web: www.woodstove.com

Quality Control
Model 211: Absolute Steel Hybrid

Each operation in the manufacture of the Absolute Steel Hybrid is performed at Woodstock Soapstone Company. Materials arrive in sheets, bars, tubes, lengths of

angle iron and flat pieces of soapstone.

Steel with surface defects or warping is exchanged or returned for credit. If questions arise about the quality of base materials, they are submitted to the NH Materials Lab in Somersworth, NH for analysis and confirmation.

All parts and subassemblies are cut, folded, drilled, punched or welded according to parts prints or assembly prints. Work from a previous stage is checked at each new stage. Work that is out of specified tolerances is corrected or discarded.

A set of procedures is written for each subassembly, particularly in welding and hand assembly, so that consistency is maintained between workers.

The final assembly also has a checklist, which is attached. Although everything on the final checklist has been examined at least once before he final assembly, the final checklist is attached included here.

Final inspection on each stove covers all of the items critical to efficiency and emissions, as well as an overall examination of the structural soundness of the appliance, the quality of workmanship, and the operation of all moving parts.

Model #211: Ideal Steel Hybrid Inspection Checklist

Stove # _____

EPA		Init
	Firebox dimensions confirmed (15.25D x 19W base; 13.25 (rear) and 15.7 (front)H	
	Fireback location and upper baffle location confirmed to print	
	Bypass damper opens and closes freely	
	Bypass has a tight seal when closed with no gaps (Paper seal test: 4 sides)	
	Bypass opening verified (2.375" x 15.5")	
	Loading door freely opens and closes	
	Loading door has a good seal when closed (Paper seal test: 4 sides)	
	Andirons are installed and can be removed and installed easily	
	Air damper opens and closes freely and properly	
	There is no play in fit of air damper to mixing plate	
	Air damper control rod is properly tensioned.	
	Top lid opens and closes properly	
	Top lid safely stays in open position	
	Top lid has a tight seal when closed (Paper seal test: 4 sides)	
	Catalyst is installed and can be removed and inserted freely	
	Catalyst rim is flat	
	No leaks between catalyst rim and bypass gasket (Paper seal test: 4 sides)	
	If there is an optional ash pan the door opens and closes freely	
	The ash pan door has a good seal when closed (Paper seal test: 4 sides)	
	The ash pan handle functions well and is set with the appropriate tension	
	Air Wash Duct system is welded tight with no pin holes or leaks	
	All visable welded seams are welded completely (Light test)	
	Brick Floor is installed according to print	
	Side wall soapstone pieces are installed and properly secured for transit	
	Decorative front/top/hinges paint quality and attachment confirmed.	
	Stove has the appropriate flue connectors and flue cover plate for top and rear exits	
	Flue collar opening is 6" diameter ID; holes are tapped, both top and rear	
	Cosmetic checks: blend grind marks and smooth out weld areas	
	Controls and handles are burr free	

Initials:_____ Date:_____

Burn In

Stove has been burned to cure the paint	
Bypass/Sled moves properly when hot	
Air damper functions when hot	
Andiron moves freely when hot	
Cat Air damper opens with heat	
Loading Smoke generation is normal as compared to others in our environment	

Initials:_____ Date:_____

Materials Verification

Gaskets

EPA	Confirm all gaskets (dimensions and fit) as follow		Desc	Part #	Init
	Bypass Gasket	40" x 0.625 Fiberglass R	LD2 .625G	21121	
	Catalyst Gasket	36" x 0.625" Fiberglass F	LD2 .625G	21122	
	Loading Door Gasket	50" x 0.750 Fiberglass R	HD .750	21175	
	Ash Pan Door Gasket	33" x 0.5" Fiberglass Ro	MD .500 BHM	21561	
	Top Lid Gasket	62" x 1.0" Fiberglass Ro	LD1 1.00	21080	
	Flue Collar Gasket	36" x .375" Adhesive-Backed Tape Gas		21209/2	
	Cover Plate Gasket	36" x .375" Adhesive-Backed Tape Gas		21209/2	
	Outside Air Adapter	106" x .375" Adhesive-Backed Tape Ga		21209/2	
	Window Gasket	59" x 3/4 Adhesive-Backed Window Ga		21209	

Catalyst

	Confirm that catalyst is:	
	Clariant Durafoil 5.25" x 10" x 2" 49 CPSI Longlife	

Initials:_____ Date:_____

Air Inlets and Outlets

Air Inlets

	Confirm Air inlets as follows		
	Primary/Secondary Mixer	Conforms to drawing/acetate	
	Catalyst Air Inlets	Check w/ gauge	
	Pilot Hole Inlets	go/no go plug	

Air Outlets

	Confirm Air Outlets as follows		
	Primary Airwash:	gauge	
	Secondary Fireback Outlet Holes	go/no go plug	
	Air Pilot Holes	go/no go plug	

Initials:_____ Date:_____

APPENDIX 8: Photographs of test set up

Dilution picture dia 6

Picture 1 : Sampling system

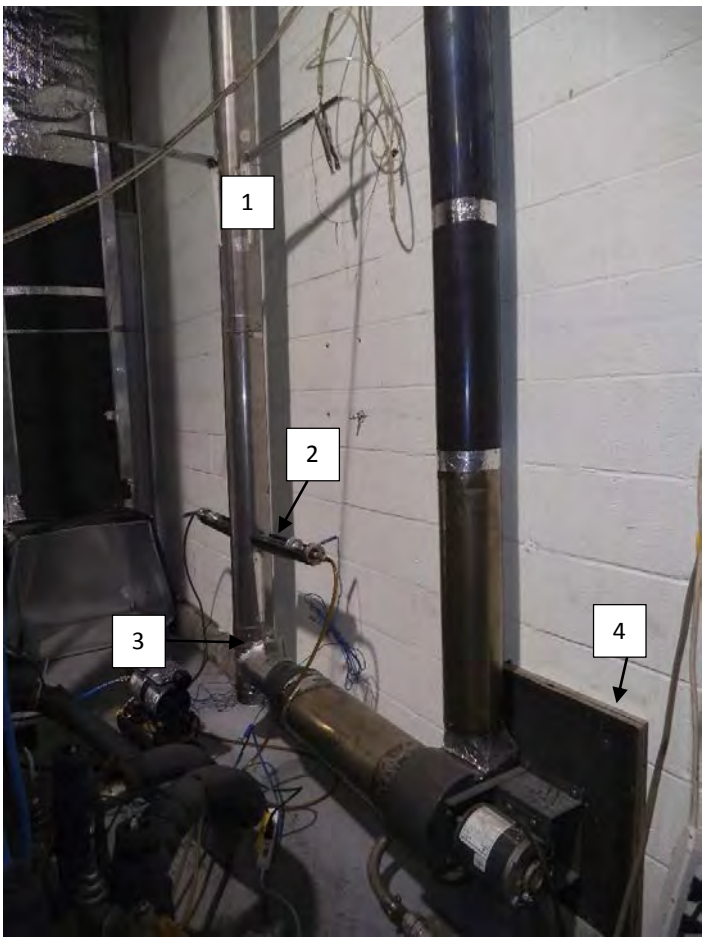

1 : 6 in dia Stainless steel pipe

2 : 16 in. Between sampling probe and lower elbow

3 : Air intake with damper to adjust flow rate

4 : Exhaust blower

Picture 2 : Hood and mixing baffle

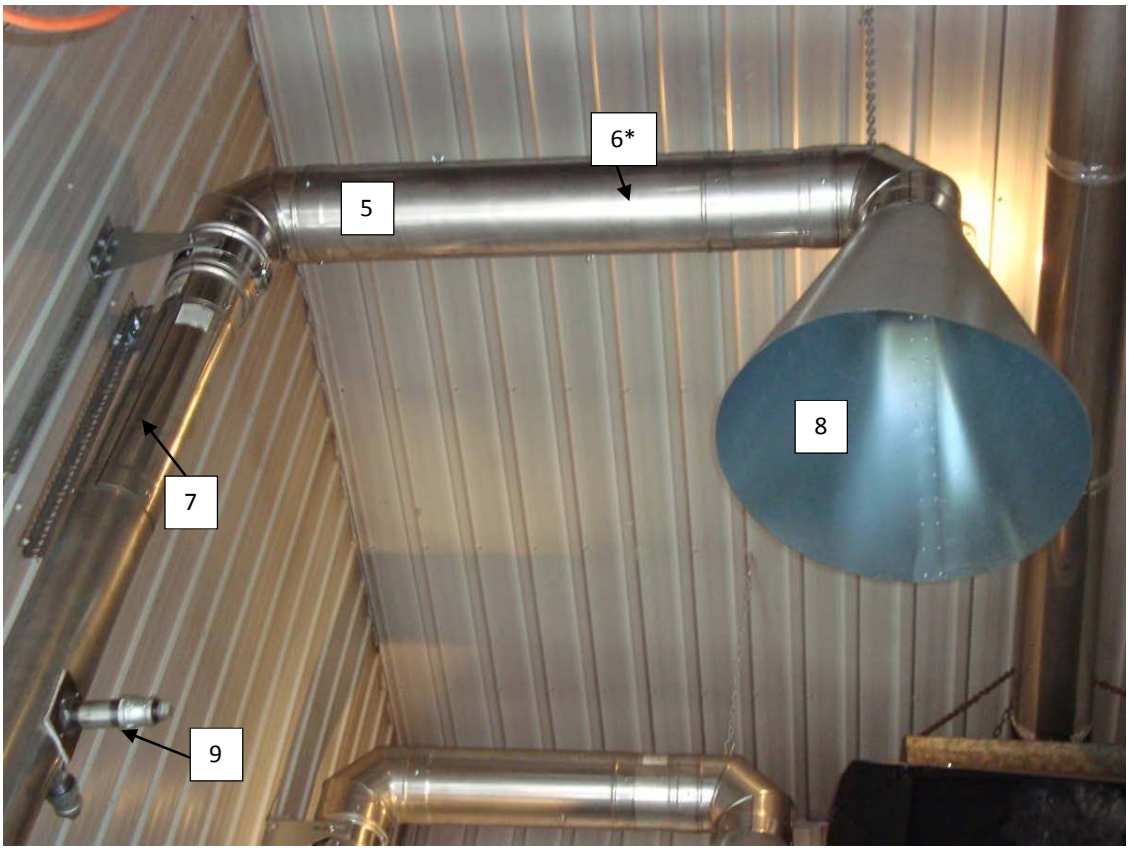

*The arrow point the deflectors inside of the pipe

5 : 8 in. dia. Stainless steel pipe

6 : Mixing baffle (2) location 1 foot between baffles

7 : 4 feet long between velocity port and upper elbow

8 : 24 in. dia. Galvanized steel smoke captures hood, located 3 feet away from dilution tunnel

9 :Velocity port

Picture 3: Stack sampling

Picture 3.1: Gas analysis and temperature probe

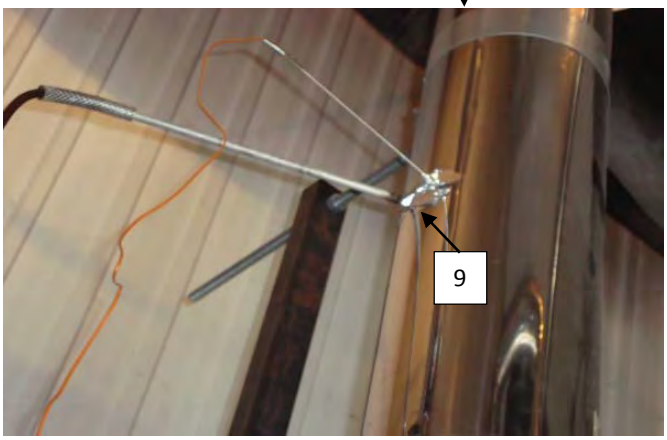

Picture 3.2: chimney support

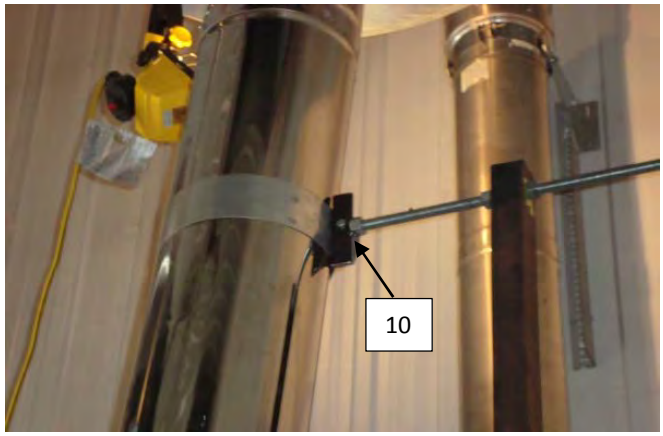

9 : Temperature and gas analyser sampling ports located 9 feet above platform

10 : Exhaust system support bracket

Picture 4: Tunnel flow measurement and sampling probe

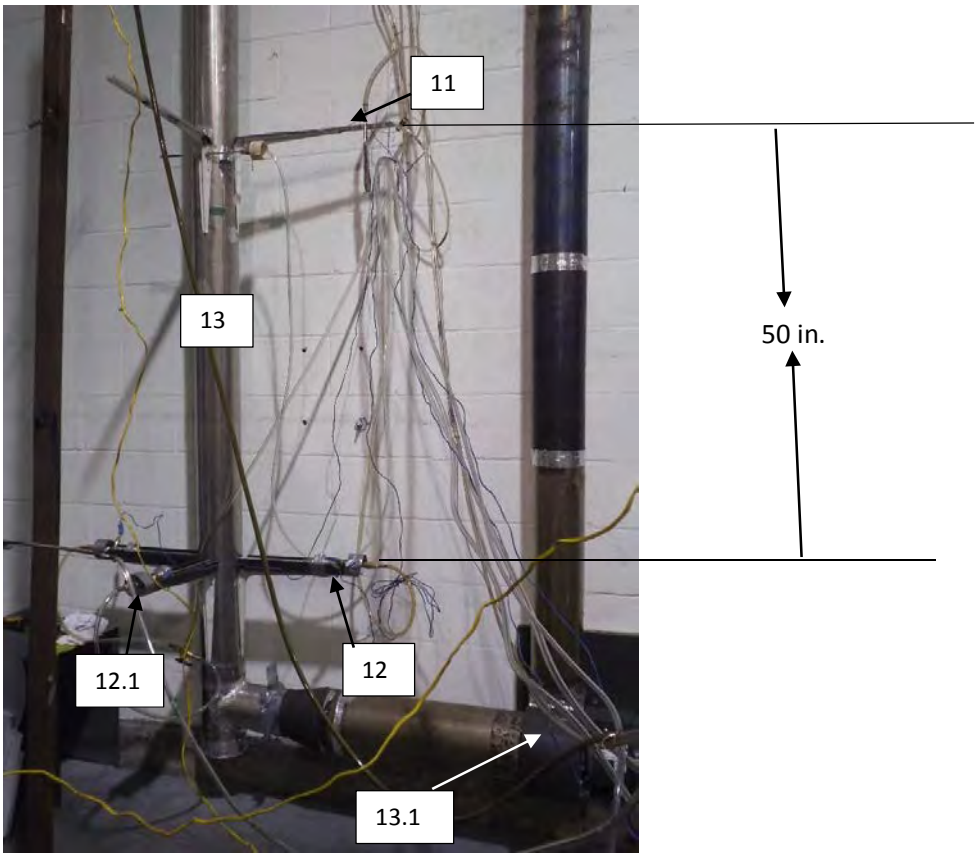

11 : Velocity port

12 :Sampling port, 2 sampling probes with 2x48 mm. dia.filter each. Filter used: Millipore AP4004700

12.1 :Sampling port, sampling probes with 2x48 mm. dia.filter each. Filter used: Millipore AP4004700, for first hour sampling

13 :15 feet long dilution tunnel

13.1 :Extraction blower

Picture 5: Draft sampling

14 : Draft sampling port located 6 in.from the flue outlet

POLYTESTS
TESTING THROUGH YOUR REALITY

Picture 6: Equipments

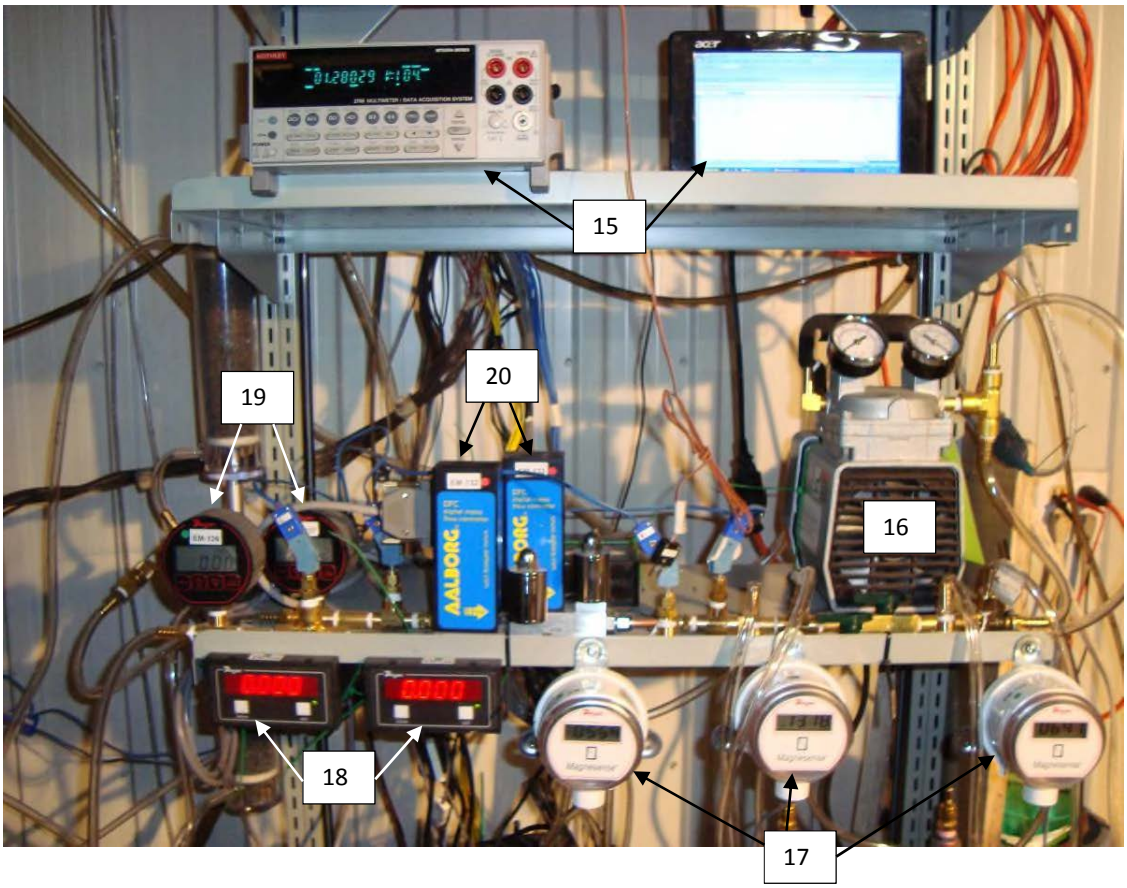

15	: Acquisition system
16	: Vacuum pump
17	: Digital manometer
18	: Digital read out for mass flow meter
19	: Digital vacuum gage
20	: Mass flow meter

Picture 7: Gaz analyser

Picture 8: Reference dry gas meter

POLYTESTS
TESTING THROUGH YOUR REALITY

Picture 12 : Dilution tunnel sample system

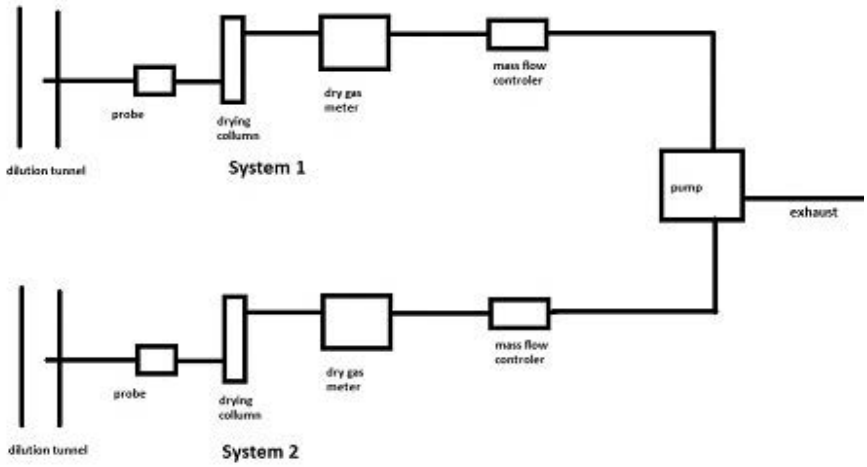

Picture 13: Dilution tunnel

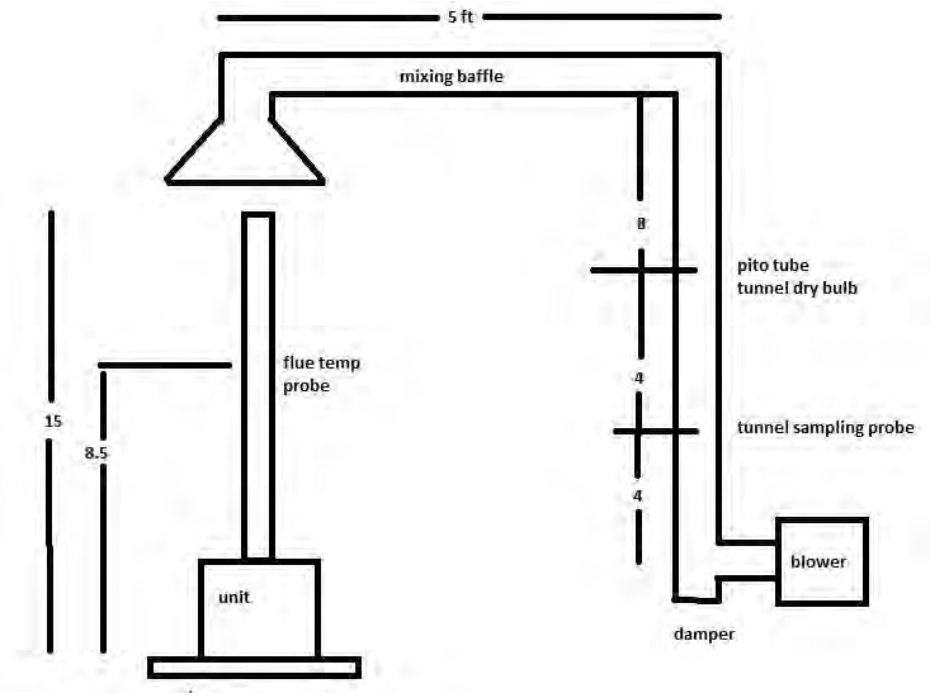

APPENDIX 9: Test load photographs

POLYTESTS
TESTING THROUGH YOUR REALITY

Run 1

POLYTESTS
TESTING THROUGH YOUR REALITY

Run 2

POLYTESTS
TESTING THROUGH YOUR REALITY

Run 3

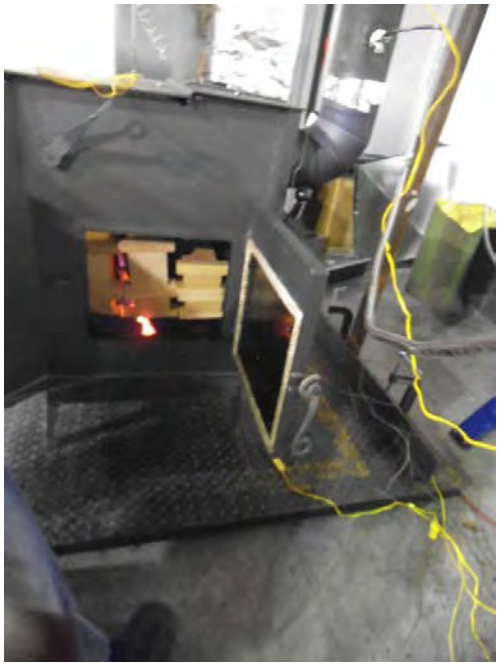

POLYTESTS
TESTING THROUGH YOUR REALITY

Run 4

POLYTESTS
TESTING THROUGH YOUR REALITY

Run 5

POLYTESTS
TESTING THROUGH YOUR REALITY

Run 6

APPENDIX 10: Laboratory Operating Procedures

POLYTESTS Services inc.

SFBA EMISSIONS AND EFFICIENCY TESTING LABORATORY OPERATING PROCEDURE

INTRODUCTION

This document provides a step by step guide for the technician conducting tests to EPA standard requirements. Procedures outlined here, when followed, will result in tests in conformance with EPA Methods 28R, ASTME2780, ASTME2515, ASTM E2618, Method 28WHH, Method 28 PTS, Method ALT-125, ASMTE 3053.

The primary measurements to be made are particulate emissions rates. The technician's duties include the following steps.

1. Incoming inspection of test units.
2. Set-up of test units.
3. Preliminary testing to establish unit operating procedures and familiarity with operating controls.
4. Calibration of test equipment.
5. Set-up, checking and operation of sampling apparatus.
6. Conduct of tests including complete record keeping and data recording for non-automated functions.
7. Operation of hardware and software included in automatic data acquisition system.
8. Review and analysis of data at test completion to ensure test validity.

The technician running this test must be familiar with the following documents, which are to be kept in the laboratory at all, times.

EPA METHODS

1. EPA METHODS 28R
2. ASTME2780
3. ASTME2515
4. ASTM E2618
5. METHOD 28WHH
6. METHOD 28 PTS
7. ALT-125
8. ASMTE 3053

POLYTESTS Services inc.

SFBA EMISSIONS AND EFFICIENCY TESTING LABORATORY OPERATING PROCEDURE

I. APPLIANCE INSPECTION AND SET-UP

A. INCOMING INSPECTION

1. Check for completeness of unit including parts, accessories, installation and operating instructions, drawings and specifications etc. Note any discrepancies or missing parts or information.
2. Check for shipping damage. If damage has occurred, notify the laboratory manager. In some cases, repairs may be made, provided the manufacturer and laboratory manager concur that repairs will not affect the unit's performance. If damage is irrepairable, a new unit will need to be obtained.
3. Note whether unit is catalytic of non-catalytic.
4. Mark unit with manufacturer's name, model number, work order number and date received.
5. If unit is safety listed, note label data including listing agency and serial number. If unit is not listed, mark all data sheets "UNLISTED". Test results will not be released until unit passes safety tests without modification unless authorized by laboratory manager.

B. UNIT SET-UP

1. All new units must be operated for a breaking in period as follows.

    a) Non-catalytic units: Ten (48) hours at medium burn rate with Douglas Fir scrap or cordwood.
    b) Catalytic units: Fifty (50) hours at medium burn rate with Douglas Fir scrap or cordwood.

    During these break-in runs the unit may be connected to a lab chimney and fuel additions noted into the corresponding data acquisition file. For catalytic units, a thermocouple must be installed in the catalyst.

    Record catalyst temperature at 1-hour intervals or on chart recorder. Operating should continue until data shows at least fifty (50) hours of operation with catalyst temperature in excess of 500 degrees Fahrenheit (active range).

    For non-catalytic units a stack thermocouple should be installed and stack temperature recorded at 1-hour intervals. Fourthy-height (48) hours minimum burn time with a stack temperature of at least 250 degrees Fahrenheit is required.

    Once break-in is completed, allow unit to cool. Clean unit thoroughly.

POLYTESTS Services inc.

SFBA EMISSIONS AND EFFICIENCY TESTING LABORATORY OPERATING PROCEDURE

2. Unit is to be placed on scale for testing. Prior to proceeding with verification process, scale should be turned on and allowed to warm up for one (1) hour minimum. Zero scale and check calibration with standard weights. One (1) 1 kg weight and one (1) 2 kg weight are provided for this purpose. Use scale verification test form no. EPA-7-TP to record results. If scale fails to reproduce weights within tolerance, check with laboratory manager before proceeding.
3. If scale checks out, place unit on scale and align so chimney will be centered in hood.
4. Attach chimney connector and chimney. Be sure all joints are sealed below sampling points. Chimney and connector should be cleaned with a wire brush. Be sure chimney connector terminates and chimney starts at proper level above scale platform. Chimney must be supported from scale so that it does not touch test enclosure or hood walls.
5. Thermocouples should be attached to surfaces of unit prior to testing. EPA requires a thermocouple on the bottom of the firebox. This must be installed prior to putting the unit on the scale. In some cases, the required thermocouple locations will be inaccessible on finished units. These units should have thermocouples installed by the manufacturer during construction. Check with the laboratory manager if problems are encountered in proper thermocouple attachment.
6. Measure firebox dimensions and record on data forms nos. EPA-2-TP. Make a three-dimensional sketch of the firebox including firebrick, baffles and obstructions. Calculate firebox volume in cubic feet with both addition and subtraction methods using forms nos. EPA-3-TP and EPA-4-TP. See Section 6.2.4 of EPA Method 28 for details of firebox volume determination.
7. If unit is catalytically equipped, additional thermocouples must be installed upstream and downstream of catalyst. Thermocouples should also be placed in the primary and secondary combustion chambers of all units.
8. Plug thermocouples into data acquisition system jacks making a check of locations and jack numbers for each test on data form no. EPA-5-TP.
9. Note that inserts are tested as if they are freestanding stoves.
10. Dilution tunnel should be cleaned prior to each certification test series and at anytime a higher burn rate follows a lower test burn rate.

POLYTESTS Services inc.

SFBA EMISSIONS AND EFFICIENCY TESTING LABORATORY OPERATING PROCEDURE

II. SAMPLING SYSTEM – SET-UP

A. GAS ANALYSIS

1. Instruments should be turned on and allowed to warm up for one (1) hour minimum.

2. Calibrate analyzers as follows:

NOTE : Prior to proceeding with calibration, make sure to use NIST tracable calibration gas bottles. Adjust flow meter if necessary at each instrument to required flow value.

a) Using span gas, adjust span control to values specified on calibration gas label.
b) Using nitrogene, adjust zero controls to provide a 0.00 analyzer readout.

c) Repeat a) and b) until no further adjustment is required.
d) Check readout vs. calibration gases (2) labels.

The CO_2 and CO analyzers are "ZEROED" on nitrogen. The O_2 analyzer is spanned on air and set for 20.9%. It is zeroed on nitrogen as well.

3. Check for response time synchronization.

a) With no fire in unit, allow reading to stabilize (O_2 should be 20.93, CO and CO_2 should equal O).
b) Flow the calibration gas in the unit and start stop watch. Note the time required for each unit to reach .90 of the calibration gas bottle value. If all three analyzers reach this value within 15 seconds of each other, synchronization is adequate. If not, contact the laboratory manager. Synchronization is adjusted by internal instrument setting.

4. Set-up sample clean-up and water collection train as follows.

a) Load impingers as follows:
Impinger #1: 100 ml distilled water and 5 ml H_2SO_4
Impinger #2: 100 ml distilled water and 5 ml H_2SO_4
Impinger #3: Empty
Impinger #4: 200 – 300 grams silica gel (dry)

b) Place impingers in container and connect with "U TUBES". Grease carefully on bottom half of ball joint so that grease will not get into tubes.

c) Connect filter to first impinger and sample line to last impinger.

e. Leak check system as follows.

1) Plug probe.
2) Turn on sample system.
3) Observe sample flow rotometer and vacuum gauge. If necessary, use vacuum; adjust valve to set vacuum to the maximum inches Hg.
4) If the float in rotometer does not stabilize below 10 on scale, system must be resealed.
5) Repeat leak check procedure until satisfactory results are obtained.

f) Just prior to starting test, fill impinger container with water and ice and record ambiant conditions on data form no. EPA-8-TP.

B. DILUTION TUNNEL SAMPLE TRAIN SET-UP

1. Filters and holders.

a) Clean probes and filter holder front housings carefully and desiccate for at least 24 hours prior to use.

b) Filters should be numbered and filter and probe combinations labeled prior to use.

c) Weigh desiccated filters and probe-filter units on analytical balance. Record weights data form no. EPA-10-TP. Note that probe and front half of front filter are to be weighed as a unit.

d) Carefully assemble filter holder units and connect to sampling systems. Check "DRIERITE" columns for adequate dry absorbent (blue).

2. Leak checking.

a) Each sample system is to be checked for leakage prior to inserting probes in tunnel.

b) Plug probes and start samplers, adjust pump bypass valve to produce a vacuum reading of 5 inches Hg. (NOTE: During test, vacuum must not exceed 5 inches unless posttest leak check shows acceptable results.)

c) Allow vacuum indication to stabilize for two (2) minutes, then record time and dry gas (DGM_1) and (DGM_2) meter readings. Wait ten (10) minutes and record dry gas meter readings again (DGM_3, DGM_4). NOTE: If mark, system is leaking too much and all seals should be checked.

d) Calculate leakage rate as follows.

1) System 1: $\frac{(DGM_3 - DGM_1)}{10} = CFM_1$

2) System 2: $\frac{(DGM_4 - DGM_2)}{10} = CFM_2$

If CFM_1 or CFM_2 is greater than .02 CFM, leakage is unacceptable and system must be resealed.

If CFM_1 or CFM_2 is greater than 0.04 X sample rate, leakage is unacceptable. For most tests, the sample rate will be about 0.15 CFM, thus leakage rates in excess of 0.04 X 0.15 = 0.006 CFM are not acceptable. Record leakage rates on form no. EPA-5-TP

e) Once leakage check is satisfactory, unplug probe and set flow to appropriate rate for test. This should be done in the minimum amount of time necessary and with the probes in ambient air. Do not insert probes in tunnel until the start of the test run. When flow is established, replug probes to prevent contamination.

III. TEST CONDUCT

A. FUEL LOAD

1. Determine optimum load weight by multiplying firebox volume in cubic feet by 7 or (10 and 12 for cordwood method). This is the load weight on an as-fired basis.
2. Determine piece size to obtain the requested load configuration and meet the test load weight criteria. The load should consist of the following: **TO BE DETERMINED**
3. Weigh out test load and adjust weight by shortening all pieces equally if necessary. Record individual piece load on form no. EPA-11-TP.

4. Measure and record moisture content of each fuel piece using Delmhorst moisture meter. Determine if fuel load moisture content is in required range. If not, construct new load using wood with required moisture content. All wood in the humidity chamber should be within range. Contact project manager if you cannot find suitable pieces. Record moisture of each individual piece load on form no. EPA-11-TP.

B. UNIT START-UP

1. Before lighting a fire, turn on dilution tunnel and set tunnel velocity to 500ft/min Record readings on data form no. EPA-9-TP.
2. Check draft imposed on cold stove with all inlets closed and a draft gauge in the chimney. If draft is greater than 0.005 inches water column, adjust tunnel to stack gap until draft is less than 0.005.
3. Check for ambient airflow around unit with hot wire anomometer. Must be less than 50 ft/min.
4. Check all equipment for proper operation. Analyzers should be on and in sample mode. Computer should be loaded with test program and awaiting test start command.
5. Zero scale and start fire with uncolored newspaper and kindling representing 10 % of test load with the same type of fuel.
6. Once kindling is burning well after 5 minutes, add splitted pieces having a bottom surface around 4 sq. inches and representing 25% of test load weight. Operate at high fire for 15 minutes. Then adjust settings to intended test run levels as per the manufacturer's.
7. Following addition of pretest fuel load (splitted pieces), start computer for data logging.
8. All fuel additions, air intake settings and operational characteristics shall be noted with associated time stamp on form no. EPA-1-TP.

POLYTESTS Services inc.

SFBA EMISSIONS AND EFFICIENCY TESTING LABORATORY OPERATING PROCEDURE

C. TEST RUN

1. Once the targeted test fuel bed weight is obtained, the test is to be started as follows:

   a) Insert the sample probes into the tunnel being careful not to hit sides of tunnel with probe tip.
   b) Check tunnel pitot tube for proper position. (Pitot should be carefully cleaned prior to each test.)
   c) Turn on probe sample systems and stack sampler.
   d) Open stove door, rake coals and load stove as follows: **TO BE DETERMINED**
   e) Close door or follow manufacturer's start-up procedures. (Five (5) minutes maximum time before all doors and controls must be set to final positions for duration of test. 15 minutes allowed for ALT-125 method))
   f) An alarm will sound an audible signal at the (10) minutes intervals. This signal a reading interval. You must verify at each interval that the following readings are correctly logged by the data acquisition system and make observations of any unusual or non-routine events that could occur.

      1) Rotometer readings.
      2) Tunnel pitot tube reading.
      (Zero regularly between readings)
      3) Gas meter readings.
      4) Temperature readings.
      5) Draft reading
      6) Test laod weight
      7) CO, CO_2 and O_2 readings
      8) Observations of any unusual or non-routine events.

   g) During the test, any condition approaching unacceptable limits will be noted. The filter probes and housings are installed in small holders just outside the tunnel. If the filter temperature gets too high, you will have to increase the water flow through the cooling unit until acceptable temperatures are obtained. In between readings, check on other equipment. Be sure dryers and filters are working and monitor impinger train for proper water and ice levels etc.

   h) When the fuel charge is consumed, it will signal end of test and shut down the sampling systems. When this occurs,

remove filter holder and probes from tunnel and impingers from sample line.

IV. POST TEST PROCEDURES

A. SAMPLE RECOVERY – FILTER TRAINS

1. Carefully clean outside of probes and filter housings with alcohol.
2. Disassemble filter holder and transfer filters to clean petri dish. Scrape gasket with scalpel and collect any loose material on filters.
3. Place probe and front half of first filter holders (still assembled) and filters in desiccator. Allow 24-hour desiccation before weighing.
4. Weigh probe filter holder units and filters at six (6) hour intervals until weight change between weighings is less than 0.2 mg. Record all weights taken on data form no. EPA-10-TP.

B. CALCULATION OF RESULTS

The computer program carries out all final calculations. When run, it will ask for data from forms used during the test. Enter data as called for.

GENERAL

This guide cannot cover every possible contingency, which may develop during a particular test program. Many questions, which may arise, can be answered by a complete understanding of the test standards and their intent. When in doubt on any detail, check with the laboratory manager and be sure you understand the procedures involved.

It is critical that all spaces on the data forms be properly filled in. Each test must be represented by a complete record of what was done and when.

APPENDIX 11: Sample calculations

Validation du fichier de calcul avec les équations provenant des normes:
ASTM E2515-11
ASTME2618

Dry burn rate (BR)

Equation used

B415.1, 13.4

$$BR = \left[\frac{60W_{WD}}{\theta}\right]\left[\frac{100 - \%M_W}{100}\right]$$

Nomenclature

BR	Dry wood burn rate, kg/hr (lb/hr)
W_{WD}	Total mass of wood burned (wet basis) during the test run, kg (lb)
θ	Total time of test run, minutes
$\%M_W$	Average moisture in test fuel charge, wet basis, %
	To convert from dry basis to wet basis: % moisture wet basis =

Sample calculation

Data

W_{WD}	15,8552	lbs
θ	105	min
$\%M_W$	17,01	%

Calculation

BR	3,412	Dry kg/hr

Volume of gas sample corrected to dry standard conditions ($V_{m(std)}$)

Equation used

ASTM 2515, equation 6

$$V_{m\,(std)} = K_1 V_m Y \left[\frac{P_{bar} + \left(\frac{\Delta H}{13.6}\right)}{T_m} \right]$$

Nomenclature

$V_{m\,(std)}$	Volume of gas sample , corrected to standard conditions, $dscm^3$ (dscf)
K_1	17.64 R/in Hg
V_m	Volume of gas sample
Y	DGM calibration factor
P_{bar}	Barometric pressure mmHg (in Hg)
ΔH	Average pressure at the outlet of the dry gas meter mm water (in. Water)
T_m	Absolute average dry gas meter temperature K (R)

Sample calculation

Data

V_m	18,31	dcf
Y	0,99005	
P_{bar}	30,33	in Hg
ΔH	-0,7657	in Hg
T_m	534,6	R

Calculation

$V_{m(std)}$	17,68	dscf

Total amount of particulate matter collected (m_n)

Equation used

ASTM 2515, equation 12

$$m_n = F_1 + F_2 + \Delta PF$$

Nomenclature

m_n	Total amount of particulate matter collected, mg
F_1	Particulate matter collected on front filter, mg
F_2	Particulate matter collected on second filter, mg
ΔPF	Post-test weight gain of probe and filter holder assembly, mg

Sample calculation

Data

F_1	0,0007	g
F_2	-0,001	g
ΔPF	0,003	g

Calculation

m_n	2,600	mg

Calculation based of train 2 data

Particulate concentration (C_S)

Equation used

ASTM 2515, equation 13

$$C_S = (0{,}001\ g/mg) \times \left(\frac{m_n}{V_{m\,(std)}}\right)$$

Nomenclature

C_S	Concentration of particulate matter in stack gas or dilution tunnel, dry basis, corrected to standard conditions, g/dsm^3 (g/dscf)
m_n	Total amount of particulate matter collected in the sampling train, mg
$V_{m(std)}$	Volume of gas sample measured corrected to dry standard conditions, dsm^3 (dscf)

Sample calculation

Data

m_n	2,600	mg
$V_{m(std)}$	17,68	dscf

Calculation

C_s	0,000147	g/dscf

Calculation based of train 2 data

Particulate concentration for room air (C_r)

Equation used

ASTM 2515, equation 14

$$C_r = (0{,}001\ g/mg) \times \left(\frac{m_r}{V_{mr\,(std)}}\right)$$

Nomenclature

C_r	Concentration of particulate matter in room air, dry basis, corrected to standard conditions, g/dsm^3 (g/dscf)
m_r	Total amount of particulate matter collected in the sampling train, mg
$V_{mr(std)}$	Volume of room air sample measured corrected to dry standard conditions, dsm^3 (dsc

Sample calculation

Data

m_r	0,100	mg
$V_{mr(std)}$	12,69	dscf

Calculation

C_r	0,000008	g/dscf

Calculation based of train 2 data

Adjustment factor for alternative pitot tube placement (FP)

Equation used

ASTM 2515, equation 1

$$F_P = \frac{V_{strav}}{V_{scent}}$$

Nomenclature

V_{strav}	Average gas velocity caclulated after the Pitot tube traverse
V_{scent}	Average gas velocity at the center of the dilution tunnel cacluated after the multi-point Pitot traverse
F_P	Adjustment factor for center of tunnel pitot tube placement

Sample calculation

Data

V_{strav}	0,0733
V_{scent}	0,0785

Calculation

F_P	0,933758

Average dilution tunnel gas velocity (V_S)

Equation used

ASTM 2515, equation 9

$$V_S = F_p K_P C_P \left(\sqrt{\Delta P}\right)_{avg} \sqrt{\frac{T_S}{P_S M_S}}$$

Nomenclature

V_S	Average dilution tunnel gas velocity, m/s (ft/s)
K_P	Pitot tube constant For the metric units: $34.97\ m/sec \left[\frac{\left(\frac{g}{g-mole}\right)(mm\ Hg)}{(°K)(mm\ H_2O)}\right]^{1/2}$ For English units: $85.49\ ft/sec \left[\frac{\left(\frac{lb}{lb-mole}\right)(in\ Hg)}{(°R)(in\ H_2O)}\right]^{1/2}$
C_P	Pitot tube coefficient (use 0.99 for standard pitot tube, 0.84 may be used for S-type tubes constructed according to Method 2 specifications)
F_P	Pitot tube correction factor
$\left(\sqrt{\Delta P}\right)_{avg}$	Average square root of each individual velocity head (ΔP)
P_{bar}	Barometric pressure at measurement site, mm H_2O (in. H_2O)
P_g	Stack static pressure, mm Hg (in. Hg)
P_S	Absolute dilution tunnel static gas pressure, mm Hg (in. Hg), or $P_{bar} + P_g$
M_S	Molecular weight of dilution tunnel gas, wet basis, g/g-mole (lb/lb-mol) may be assumed to be 28.78 or 29 for CSA B415
t_S	Dilution tunnel temperature, °C (°F)
T_S	Absolute dilution tunnel temperature, °K (°R), or 273 + t_s for metric units, 460 + t_s for English units

Sample calculation

<u>Data</u>

K_P	85,49	
C_P	0,99	
F_P	0,934	
$\left(\sqrt{\Delta P}\right)_{avg}$	0,2687	in $H_20^{1/2}$
P_{bar}	30,33	in Hg
P_g	0,27	in H_20
P_S	30,35	in Hg
M_S	28,78	lb/lb-mol
t_S	123,65	F

T_S	583,65	R

Calculation

V_S	17,3576	ft/s

Average dilution tunnel gas flow rate (Qstd)

Equation used

ASTM 2515, equation 3

$$Q_{std} = 60(1 - B_{WS})V_S A \left(\frac{T_{std}}{T_S}\right)\left(\frac{P_S}{P_{std}}\right)$$

Nomenclature

Q_{std}	Total gas flow rate corrected to dry standard conditions, dsm^3/min (dscf/min)
60	Conversion factor minutes per hour
B_{WS}	Water vapour in the dilution tunnel stream, proportion by volume (may be assumed to be 2%)
V_S	Average dilution tunnel gas velocity, m/s (ft/s)
A	Cross-sectional area of dilution tunnel, m^2 (ft^2)
T_{std}	Standard absolute temperature, 293 °K (528°R)
T_S	Absolute average dilution tunnel temperature, °K (°R), or 273 + t_s for metric units, 460 + t_s for English units
t_S	Dilution tunnel temperature, °C (°F)
P_S	Absolute dilution tunnel static gas pressure, mm Hg (in. Hg), or P_{bar} + P_g
P_{bar}	Barometric pressure at measurement site, mm Hg (in. Hg)
P_g	Dilution tunnel static pressure, mm Hg (in. Hg)
P_{std}	Standard absolute pressure, 760 mm Hg (29.92 in. Hg)

Sample calculation

Data

B_{WS}	0,02	
V_S	17,358	
A	0,196	ft^2
T_{std}	528	R
T_S	583,65	R
P_S	30,347	in Hg
P_{std}	29,92	in Hg

Calculation

Q_{std}	183,88	dscf/min

Particulate emission rate (E)

Equation used

$$E = (C_S - C_r)Q_{std}$$

Nomenclature

E	Particulate emission rate, g/hr
C_S	Concentration of particulate matter in stack gas or dilution tunnel gas, dry basis corrected to standard conditions, g/dscm^3 (g/dscf)
C_r	Concentration of particulate matter in room air, g/dscm^3 (g/dscf)
Q_{std}	Total gas flow rate, dry basis corrected to standard conditions, dsm^3/min (dscf/min)

Sample calculation

Data

C_S	0,000147	g/dscf
C_r	0,000008	g/dscf
Q_{std}	183,88	dscf/min

Calculation

E	0,03	g/min
E	1,54	g/h

Calculation based on train 2 data.

Total particulate emission rate (E_T)

Equation used

ASTM 2515, equation 15

$$E_T = (C_S - C_r)Q_{std}\theta$$

Nomenclature

E_T	Total particulate emission, g
C_S	Concentration of particulate matter in stack gas or dilution tunnel gas, dry basis corrected to standard conditions, g/dscm^3 (g/dscf)
C_r	Concentration of particulate matter in room air, g/dscm^3 (g/dscf)
Q_{std}	Total gas flow rate, dry basis corrected to standard conditions, dsm^3/min (dscf/min)
θ	Total sampling time, min

Sample calculation

Data

C_S	0,000147	g/dscf
C_r	0,000008	g/dscf
Q_{std}	183,88	dscf/min
θ	105	min

Calculation

E	2,69	g

Calculation based on train 2 data.

Average gas velocity in dilution tunnel during each min interval, i, of the test run

Equation used

ASTM 2515, equation 10

$$v_{si} = F_p K_p C_p \sqrt{\Delta p_i} \sqrt{\frac{T_{si}}{P_s M_s}}$$

Nomenclature

v_{si}	Average gas velocity in dilution tunnel during each min interval, i of the test run m/sec (ft/sec)
F_P	Pitot tube correction factor
K_P	Pitot tube constant For the metric units: $34.97\ m/sec \left[\frac{\left(\frac{g}{g-mole}\right)(mm\ Hg)}{(^\circ K)(mm\ H_2O)}\right]^{1/2}$ For English units: $85.49\ ft/sec \left[\frac{\left(\frac{lb}{lb-mole}\right)(in\ Hg)}{(^\circ R)(in\ H_2O)}\right]^{1/2}$
C_P	Pitot tube coefficient (use 0.99 for standard pitot tube, 0.84 may be used for S-type tubes constructed according to Method 2 specifications)
Δp_i	interval, i, of the test run
T_{Si}	Absolute average gas temperature in the dilution tunnel during the ith minutes
P_S	Absolute dilution tunnel static gas pressure, mm Hg (in. Hg), or $P_{bar} + P_g$
M_S	Molecular weight of dilution tunnel gas, wet basis, g/g-mole (lb/lb-mol) may be assumed to be 28.78

Sample calculation

Data

i=1			**i=2**		
F_P	0,934		F_P	0,934	
K_P	85,49		K_P	85,49	
C_P	0,99		C_P	0,99	
Δp_i	0,075	in H_20	Δp_i	0,074	in H_20
T_{Si}	566,7	R	T_{Si}	563,9	R
P_S	30,35	in Hg	P_S	30,35	in Hg
M_S	28,78	lb/lb-mol	M_S	28,78	lb/lb-mol

Calculation

i=1			**i=2**		
v_{si}	17,39	ft/sec	v_{si}	17,23	ft/sec

Percent of proportional sampling rate (PR)

Equation used

B415, equation 13.1

$$PR = \left(\frac{\theta V_{mi(std)} V_S T_m T_{Si}}{\theta_i V_m V_{Si} T_{mi} T_S}\right) \times 100$$

Nomenclature

PR	Percent of proportional sampling rate (%)
θ	Total sampling time, min
θ_i	Time of interval, 1 min
V_m	Volume of gas sample measured by the DGM, dsm^3 (dscf)
$V_{mi(std)}$	Volume of gas sample measured by the digital mass flow controller during the ith 1 minutes interval, dsm^3 (dscf)
V_S	Average gas velocity in the dilution tunnel, ft/min
V_{Si}	Average gas velocity in the dilution tunnel during the ith 10 minutes interval, ft/min
T_m	Absolute average digital mass flow controller temperature, K (R)
T_{mi}	Absolute average digital mass flow controller temperature during the ith 1 minutes
T_S	Absolute average gas temperature in the dilution tunnel, K (R)
T_{Si}	Absolute average gas temperature in the dilution tunnel during the ith 1 minutes

Sample calculation

Data

train =1			train =2		
θ	105	min	θ	105	min
θ_i	1	min	θ_i	1	min
V_m	18,13	dcf	V_m	17,69	dcf
$V_{mi(std)}$	0,174	cuft	$V_{mi(std)}$	0,1677	cuft
V_S	17,37	ft/sec	V_S	17,37	ft/sec
V_{Si}	17,403	ft/sec	V_{Si}	17,403	ft/sec
T_m	534,1	R	T_m	534,6	R
T_{mi}	531,52	R	T_{mi}	531,87	R
T_S	583,65	R	T_S	583,65	R
T_{Si}	566,7	R	T_{Si}	566,7	R

Calculation

train=1			**train=2**		
PR	98,0	%	PR	97,0	%

Filter face velocity check

Equation used

$$FV_{max} = \frac{V_{mL}}{1} \times \frac{1}{F_A}$$

Nomenclature

FV_{max}	Maximum filter face velocity during the test run, m/min (ft/min)
V_{mL}	Largest 1 minute interval metered gas volume value recorded during the test run, dm^3 (dcf)
F_A	Filter area exposed to gas sample during train operation, m2 (ft^2)

Sample calculation

Data

V_{mL}	0,168	dcf
F_A	0,0116	ft^2

Calculation

FV_{max}	14,47	ft/min

Dual train precision

Equation used

$$\frac{Train\ 1 - average\ train\ 1\ and\ train\ 2}{average\ train\ 1\ and\ train\ 2} \times 100 \leq 7.5\%$$

Nomenclature

Dual train precision	Deviation between emission's train 1 and 2
Train 1	Total emission for train 1
Train 2	Total emission for train 2

Sample calculation

Data

Train 1	2,62	g
Train 2	2,69	g

Calculation

Dual train precision	1,33	%

Analyzer drift checks

Equation used

$$Drift = \frac{\Delta R}{span} \times 100$$

Nomenclature

Drift	The change in analyzer response to calibration gas over the duration of the test run
ΔR	The difference between the analyzer response at the end of the test run and the
Span	The upper limit of the instrument range, ppmv or %

Sample calculation

Data

ΔR	0,015	%
Span	5	%

Calculation

Drift	0,30	%

Calculated with CO concentration values.

APPENDIX 12: Volume calculations

MODEL 211 FIREBOX CALCULATION: 2.43 CU FT

FIREBOX VOLUME CALCULATIONS

ebox dimensioned and modeled as a solid object. Total firebox volume = 2.43 CUBIC FEET

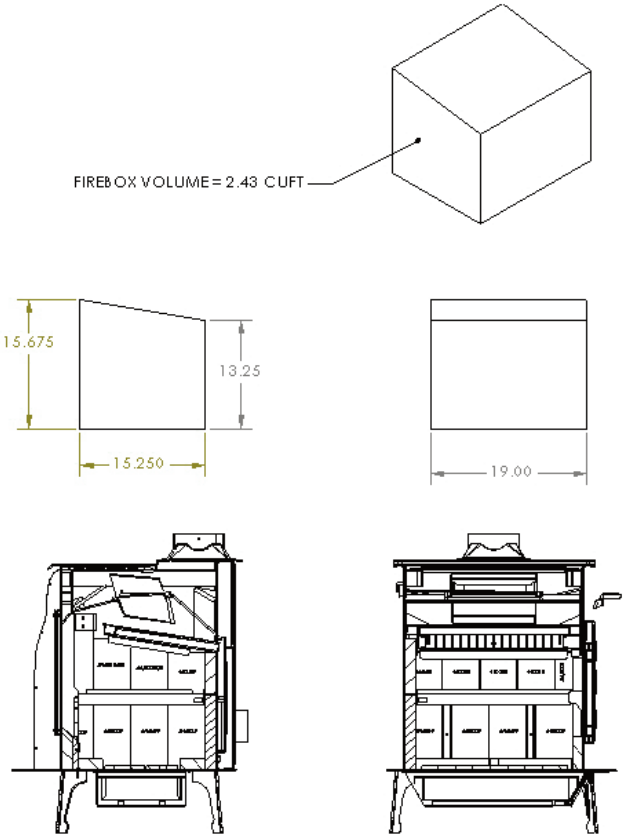

MACHINE CALCULATION

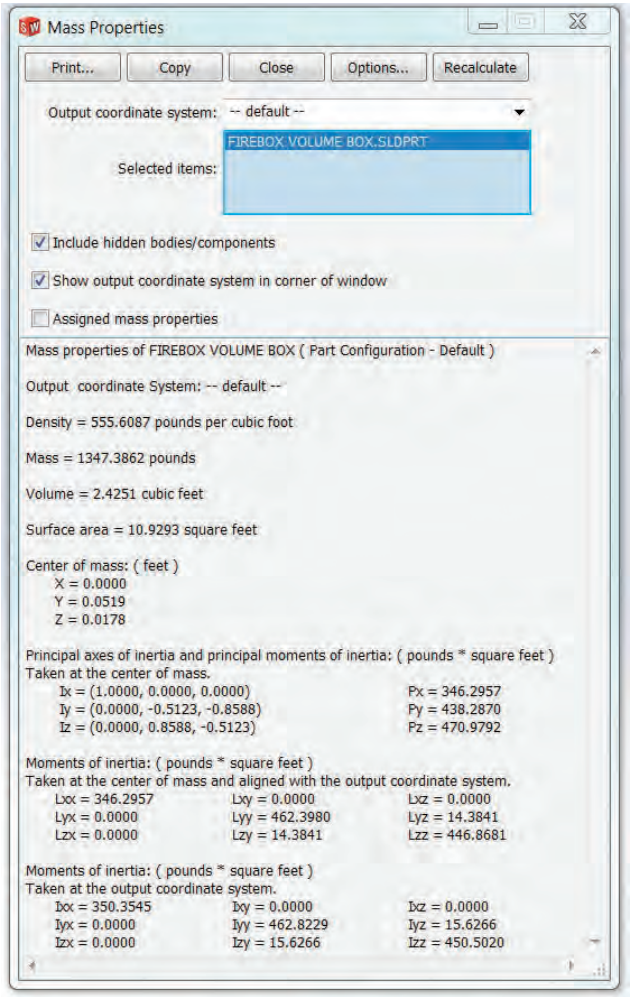

Mass Properties

Print... | Copy | Close | Options... | Recalculate

Output coordinate system: -- default --

Selected items: FIREBOX VOLUME BOX.SLDPRT

☑ Include hidden bodies/components

☑ Show output coordinate system in corner of window

☐ Assigned mass properties

Mass properties of FIREBOX VOLUME BOX (Part Configuration - Default)

Output coordinate System: -- default --

Density = 555.6087 pounds per cubic foot

Mass = 1347.3862 pounds

Volume = 2.4251 cubic feet

Surface area = 10.9293 square feet

Center of mass: (feet)
X = 0.0000
Y = 0.0519
Z = 0.0178

Principal axes of inertia and principal moments of inertia: (pounds * square feet)
Taken at the center of mass.

Ix = (1.0000, 0.0000, 0.0000)	Px = 346.2957
Iy = (0.0000, -0.5123, -0.8588)	Py = 438.2870
Iz = (0.0000, 0.8588, -0.5123)	Pz = 470.9792

Moments of inertia: (pounds * square feet)
Taken at the center of mass and aligned with the output coordinate system.

Lxx = 346.2957	Lxy = 0.0000	Lxz = 0.0000
Lyx = 0.0000	Lyy = 462.3980	Lyz = 14.3841
Lzx = 0.0000	Lzy = 14.3841	Lzz = 446.8681

Moments of inertia: (pounds * square feet)
Taken at the output coordinate system.

Ixx = 350.3545	Ixy = 0.0000	Ixz = 0.0000
Iyx = 0.0000	Iyy = 462.8229	Iyz = 15.6266
Izx = 0.0000	Izy = 15.6266	Izz = 450.5020

HAND CALCULATION

ABSOLUTE FIREBOX CALCULATION					
	W	L	H	Total s.i.	Total s.f.
Cube	15.250	19.000	13.250	3839.188	
Triangle	15.250	19.000	2.425	351.322	
			15.675	4190.509	2.4251

APPENDIX 13: Operating instruction

Starting Instructions for Woodstock Soapstone Model 211:

1. Leave about ½" of ash and charcoal on the grate.
2. Build a fire as follows:
    a. Place three 15" Douglas fir 2x4s on the bottom on the firebox, from front to back. Put kindling and paper between the pieces. This is the first layer;
    b. Place eight pieces of 6-7" Douglas fir 2x4s diagonally on top of the 15" 2x4s. Put split pieces of kindling between these pieces also. This is the second layer.
    c. For the third layer, build a small bonfire with small split pieces of kindling and newspaper in the middle.
3. This is a "top-down" fire. Light the kindling bonfire on top, and let the coals drop to the bottom and ignite the preload.
4. Set the damper mostly open, and latch the door in the détente position.

• For HIGH BURN, leave the damper all the way open, and insert the test load when the preborn is between 20-25% of the test load weight.

•For CATEGORY 3 BURN, close the damper to the category 3 position when there is approximately 4.5# of wood remaining before the preborn reaches 25% of test load.

•For CATEGORY 2 and 1, close the damper to the test position when there is approximately 3# of wood remaining before the preburn reaches 25% of test load. Leave the door in the détente position to maintain some activity in the coalbed prior to loading.

•The catalyst should be over 600 degrees to begin a test, and there should be an active coalbed. If this is not the case, add more preborn fuel, and repeat the appropriate steps above.

APPENDIX 14: Drawing Air flow pattern

Model 211, Absolute Steel Hybrid
Air-Flow Patterns: Bypass Open and Bypass Closed

Bypass Open/Cutaway

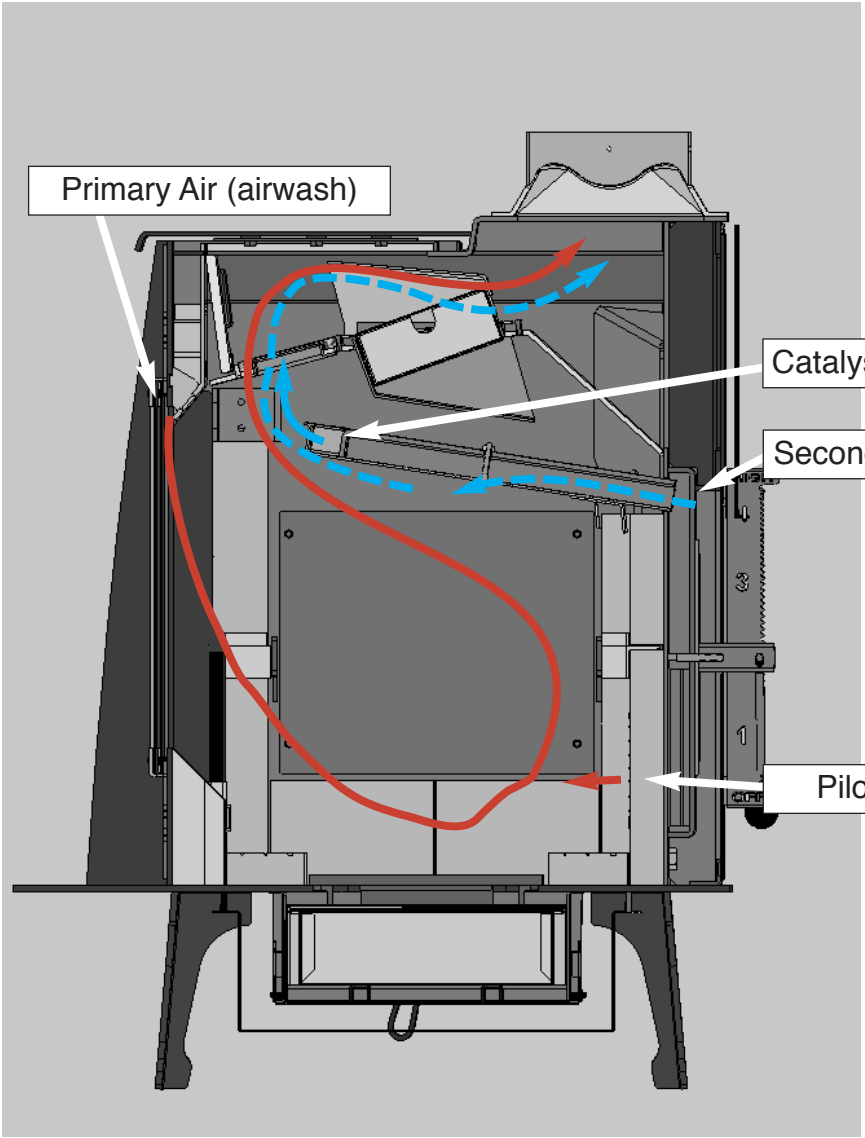

Bypass Closed/Cutaway

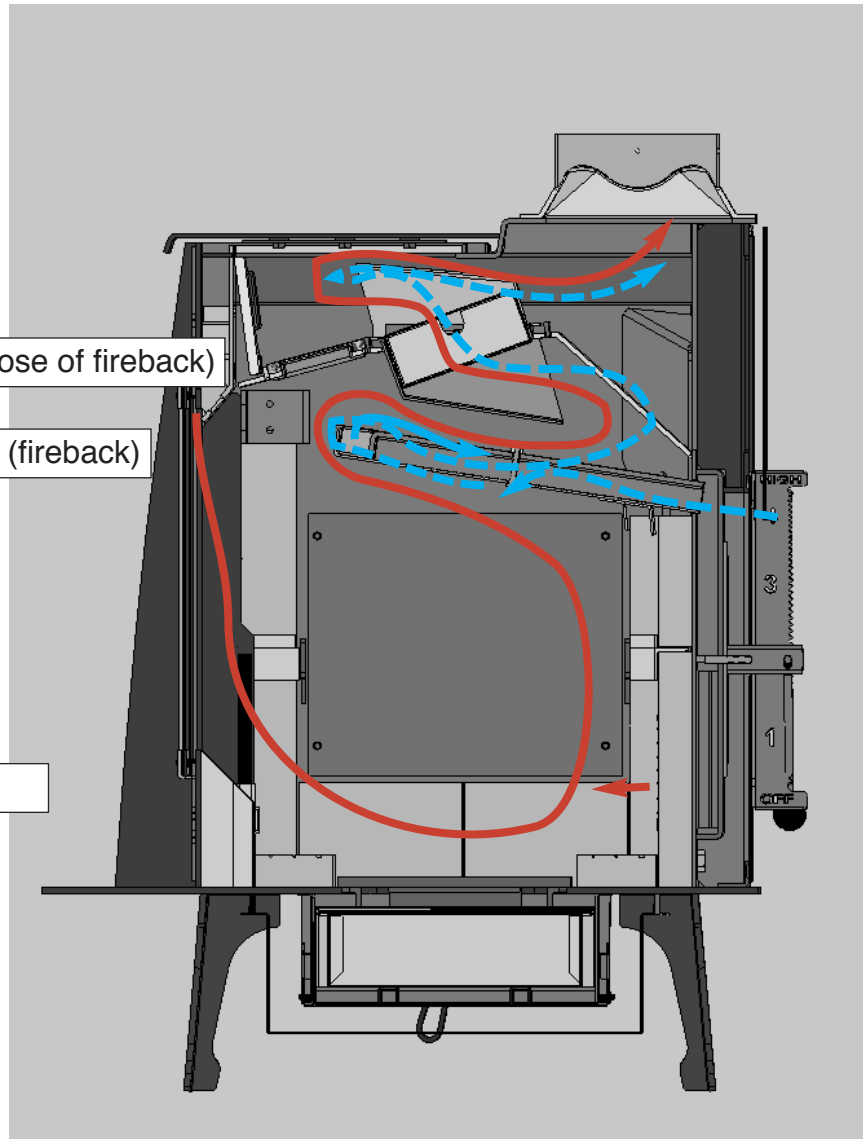

PFS Corporation d/b/a PFS TECO
An Employee-Owned Company

Certificate of Conformity

Issued to:	Woodstock Soapstone Company, Inc. Thomas Morrissey 66 Airpark Road West Lebanon, NH 03784 (603) 298-5955
Name:	Absolute Steel Hybrid
Model:	211
Effective Date:	February 19, 2016
Renewal Date:	May 3, 2021
Revision Date:	Rev 1: May 3, 2021
Report #	PI-20122 (Polytest)

*See revision schedule on page 2 for summary of revision history.

Certification tests were performed by Services Polytests, Inc. located at: 695-B Gaudette- St-jean-sur-Richelieu, QC, J3B 7S7 CANADA.

PFS TECO certifies conformity to the following per 40 CFR Part 60 §60.533 (f) (A):

- The test report is complete and accurate.
- The instrumentation used for the test was properly calibrated.
- The representative model tested meets the applicable emission limits.
- The tests have been conducted per the appropriate guidelines.
- The manufacturer's Quality Control Plan has been reviewed to ensure that all production units are similar in all material respects that would affect emissions to the tested/certified model and that the units in the model line will meet all (other) applicable requirements.

PFS TECO certifies that the emissions levels as measured in the test report are in compliance with the 2020 PM emission limit of ≤ 2.0 g/hr using crib wood Per EPA method 28R, ASTM E2515.11. Efficiency was calculated per CSA B415.11-10

The weighted average emissions for the Model 211 wood heater is **0.50 g/hr** with a weighted average efficiency of **76.74%.** Average CO emissions are **0.04 g/min.**

Issued by: PFS TECO
11785 SE Highway 212
Suite 305
Clackamas, OR 97015

John Steinert, Vice-President Hearth Products Division

PFS TECO is accredited by IAS to ISO 17020:2012 "Criteria For Bodies Performing Inspections, ISO 17025: 2005 "Requirements For Testing Laboratories", and by Standards Council of Canada to ISO 17065: 2012 "Requirements For Bodies Operating Product Certification Systems".

Revision Summary

Date: February 19, 2016 – Original C of C Issued- OMNI-Test Laboratories

Date: May 3, 2021 – The following revision were made to the report on 4/29/2021:

Revision 1:

- Update comments p.14, 3.4 operation during testing for anomalies, and validity of runs. Update NCBI report to include firebox Volume. Section 1.4 p6 preburn done at medium heat draw. No preliminary runs have been done on this stove typo removed from the original report. Stove received on January 4th and test start on January 5th, not enough time for a preliminary run. Update table2.1 for Co average gr/hr and gr/min.

Date: May 3, 2021

- Revised Certificate of Conformity Issued